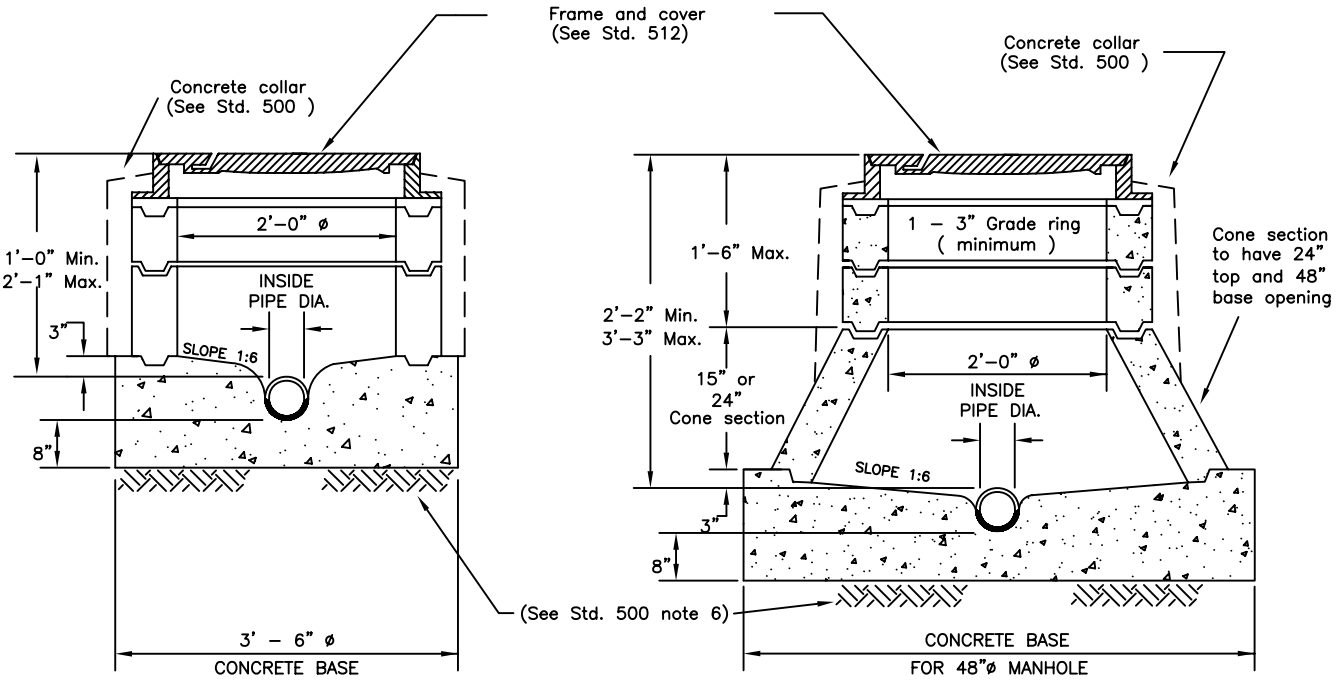

TYPE "A" MANHOLE

TYPE "B" MANHOLE

SHALLOW MANHOLE DETAILS

NOTE – See Std. 500 for typical construction details

NOTE – Type "A" Manhole to be installed only where specifically approved by the Director of Utilities.

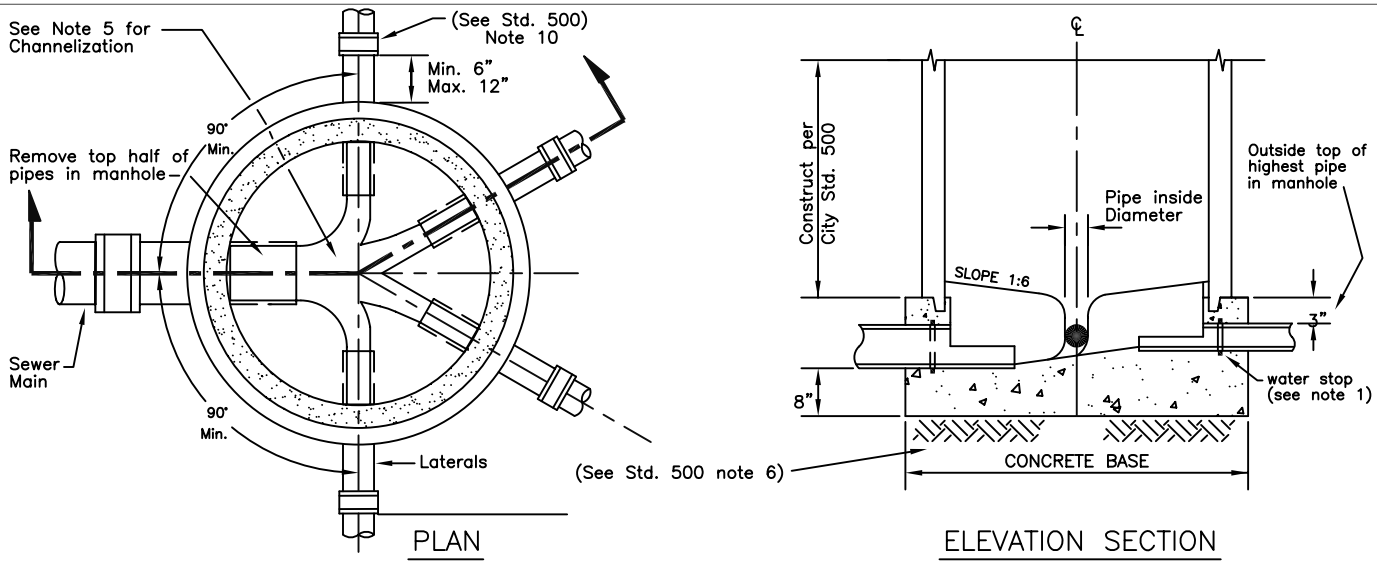

PLAN

ELEVATION SECTION

JUNCTION STRUCTURE FOR MULTIPLE LATERALS

NOTES:

1. An approved water stop shall be installed on all pipe entering or leaving a manhole and centered under manhole wall as shown.
2. Generally, the elevations of the top of all pipes entering the manhole base block shall be the same.
3. The maximum number of laterals to be connected to a manhole is (4) four.
4. See Std. 500 for manhole construction details.
5. The channels shall be formed to provide smooth flow through the manhole to the satisfaction of the City Engineer.
6. Channels and laterals through the exterior of the base shall be constructed radially.

City of Lakeport

SHALLOW MANHOLES

JUNCTION STRUCTURES
FOR MULTIPLE LATERALS

SCALE: NONE	DATE: Jan 2003	
DWN:	APPROVED	FILE NO.
CHK:		