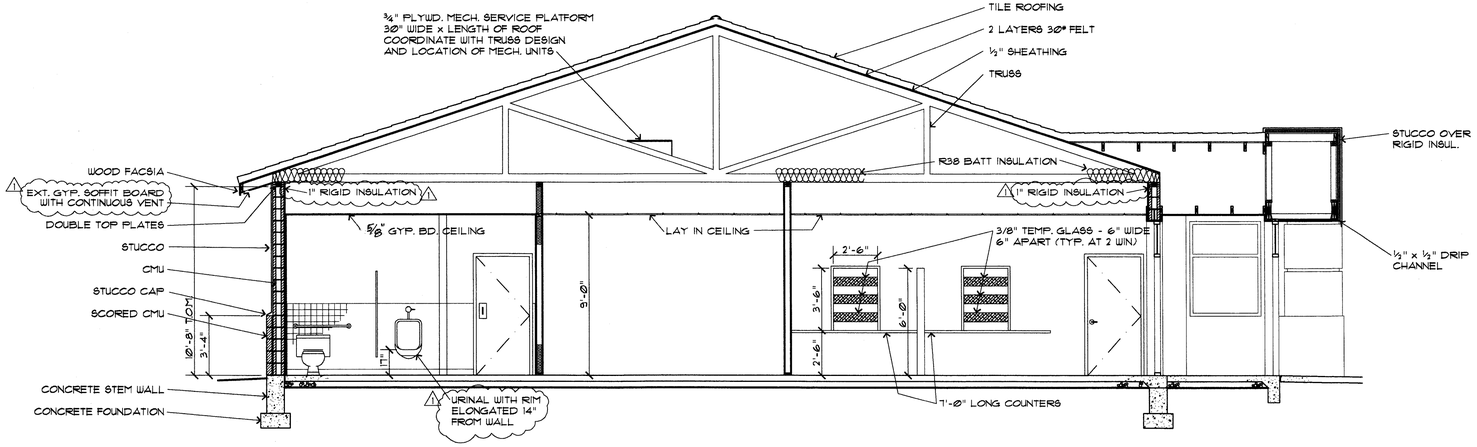

1 / A1 A4 BUILDING SECTION

SCALE: ¼" = 1'-0"

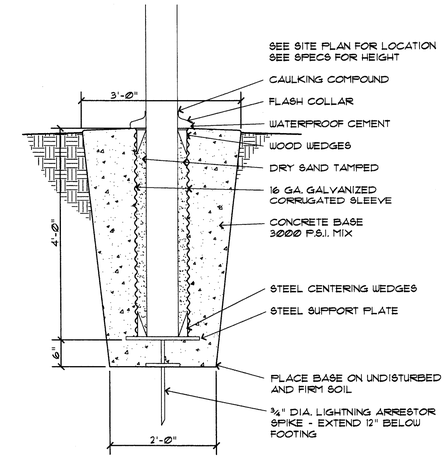

2 / A4 FLAG POLE BASE

SCALE: ¾" = 1'-0"

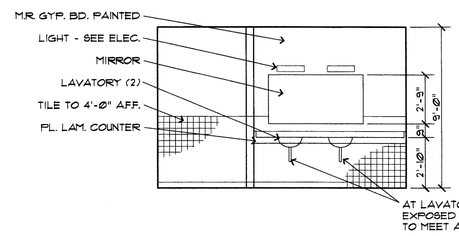

3 / A1 A4 RESTRM 109 (108 OPP.)

SCALE: ¼" = 1'-0"

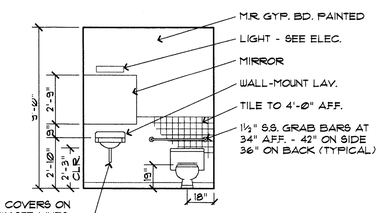

4 / A1 A4 RESTROOM 113

SCALE: ¼" = 1'-0"

NOTE:
Locate operable part of dispensers within 40" of the floor.

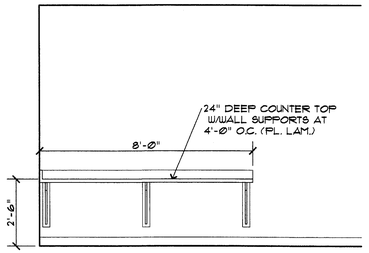

5 / A1 A4 SIT DOWN COUNTER

SCALE: ⅜" = 1'-0"

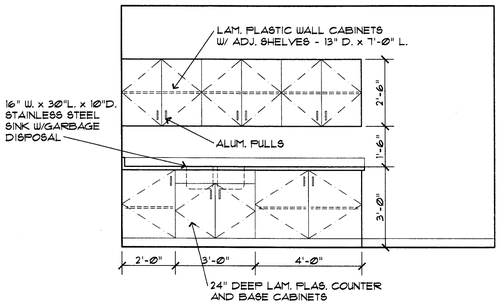

6 / A1 A4 BREAK ROOM

SCALE: ⅜" = 1'-0"

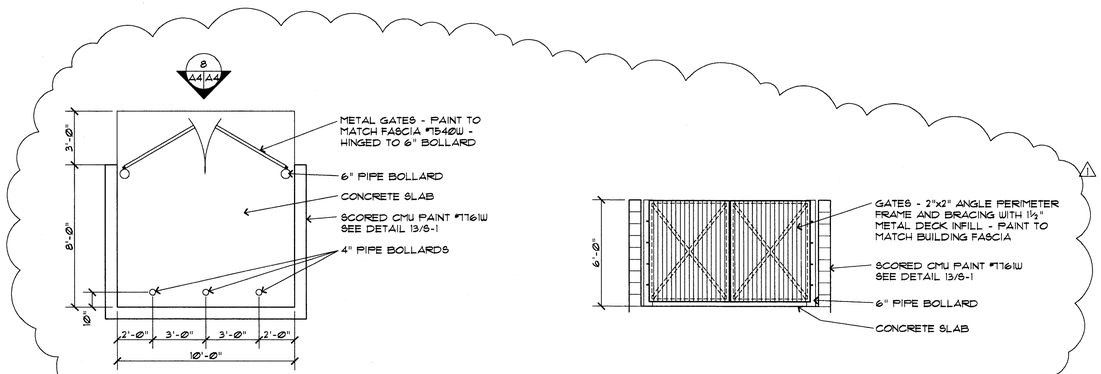

7 / - A4 TRASH ENCL. PLAN

SCALE: ¼" = 1'-0"

8 / A4 A4 TRASH ENCL. ELEVATION

SCALE: ¼" = 1'-0"

NOTE:
SEE CIVIL DRAWINGS FOR LOCATION OF TRASH ENCLOSURE

IMPERIAL INDUSTRIAL GROUP - NEW BUILDING FOR SSA/GSA LAKEPORT, CALIFORNIA

D D AND A INCORPORATED

ARCHITECTS AND INTERIOR DESIGNERS
4117 N. 17TH STREET PHOENIX, ARIZONA 85016 TELE. (602) 212-0422

REVISION
1 MAY 7, 2001

JOB	8856
DATE	JAN 2001
DRAWN	GJK
CHECKED	
SHEET	

DETAIL SYMBOL
DETAIL NUMBER
LOCATION SHEET | DETAIL SHEET

LICENSED ARCHITECT PAUL SKARPHOL NO. 11887 RENEWAL DATE 3-13 STATE OF CALIFORNIA

JUL 05 2001

PLAN REVIEW ACCEPTANCE BY THE PHILLIPS GROUP APPLIES ONLY TO PLAN SHEETS WHICH HAVE THIS STAMP

APPROVED

A-4

2001050