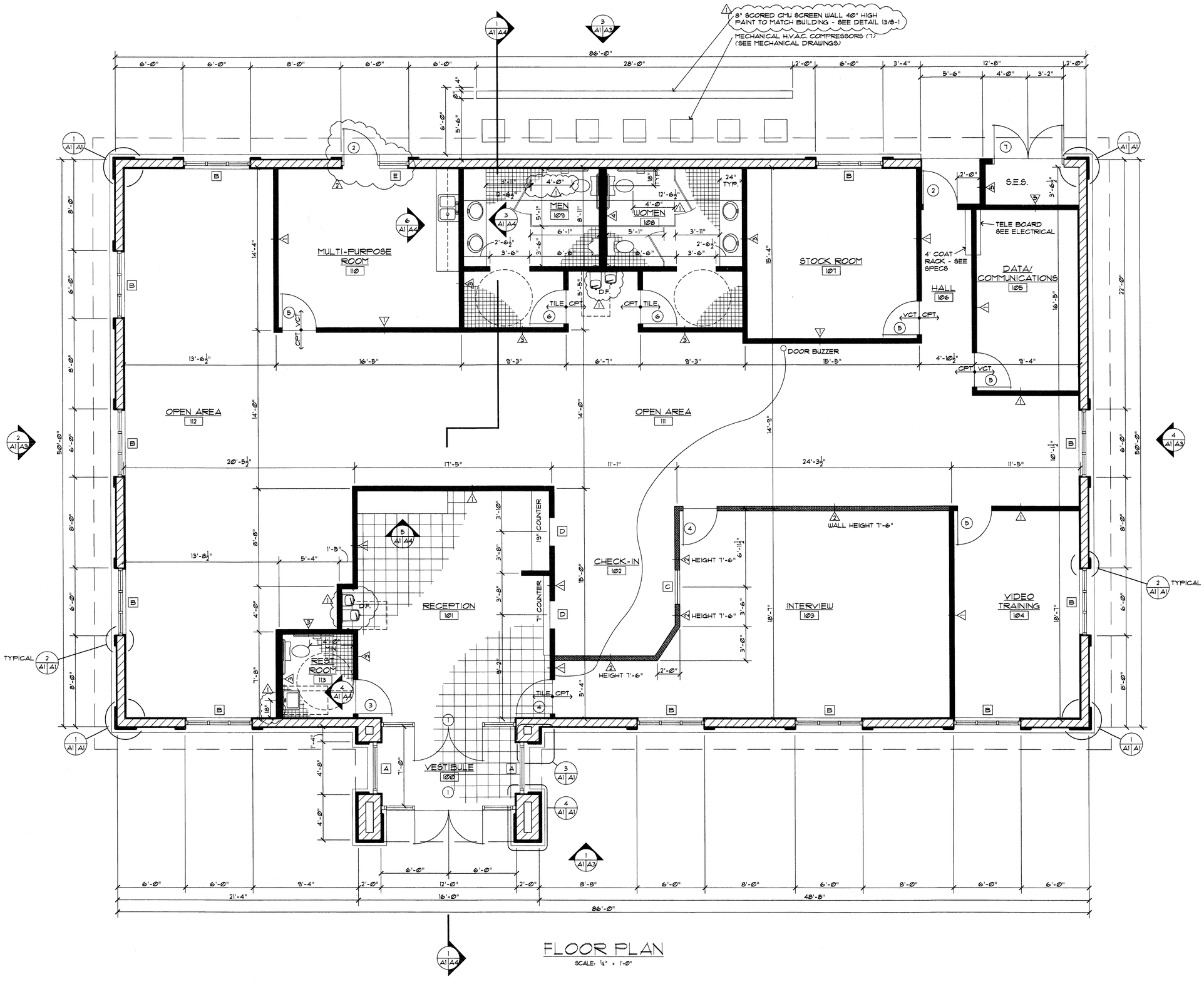

FLOOR PLAN
SCALE: 1/4" = 1'-0"

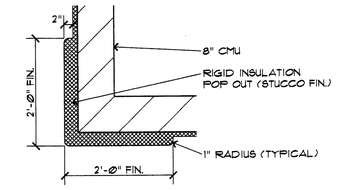

BUILDING CORNER
SCALE: 3/4" = 1'-0"

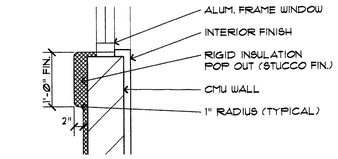

TYPICAL WINDOW
SCALE: 3/4" = 1'-0"

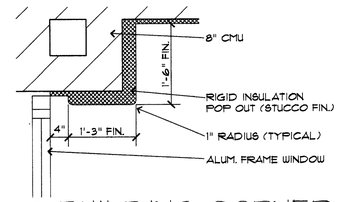

BUILDING CORNER
SCALE: 3/4" = 1'-0"

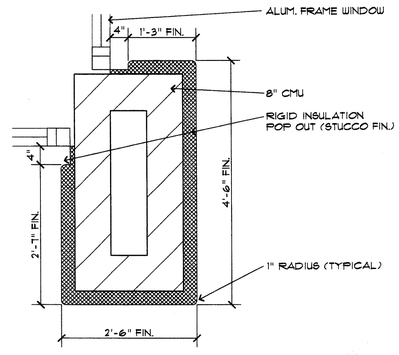

ENTRANCE CORNER
SCALE: 3/4" = 1'-0"

IMPERIAL INDUSTRIAL GROUP - NEW BUILDING FOR SSA/GSA LAKEPORT, CALIFORNIA

D D AND A INCORPORATED

ARCHITECTS AND INTERIOR DESIGNERS
4117 N. 17TH STREET PHOENIX, ARIZONA 85016 TELE. (602) 212-0422

REVISION	
1	MAY 7, 2001
2	JUNE 8, 2001

JOB	8956
DATE	JAN 2001
DRAWN	GJK
CHECKED	
SHEET	

DETAIL SYMBOL
DETAIL NUMBER
LOCATION SHEET | DETAIL SHEET

LICENSED ARCHITECT PAUL SKARPHOL NO. C-33867 RENEWAL DATE STATE OF CALIFORNIA

JUL 05 2001

NORTH

PLAN REVIEW ACCEPTANCE BY THE PHILLIPS GROUP APPLIES ONLY TO PLAN SHEETS WHICH HAVE THIS STAMP

A-1

REVISED

20010612