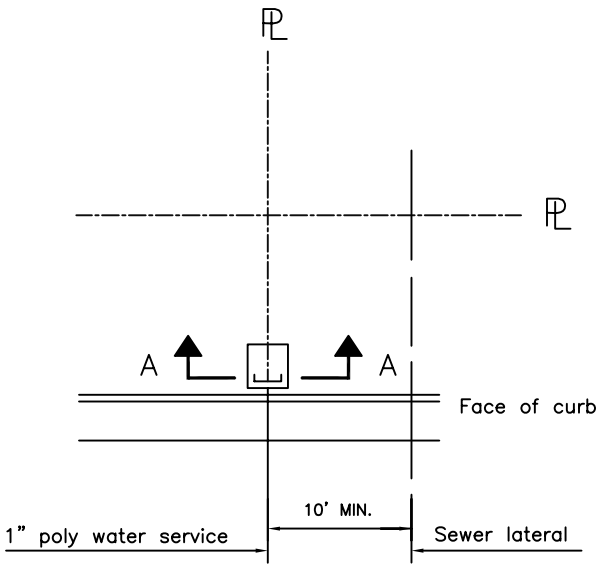

PLAN VIEW

APPROVED CONCRETE METER BOX & LID

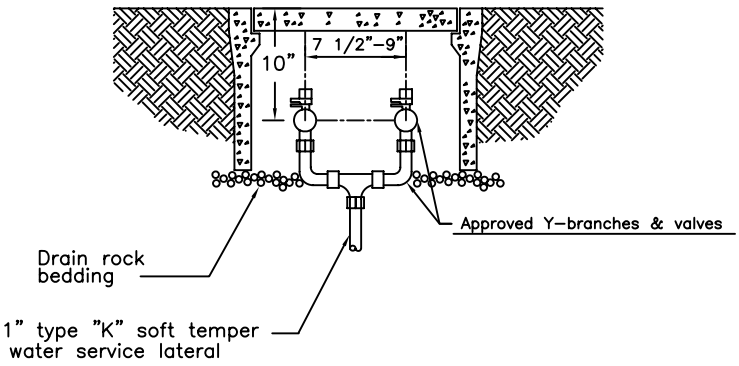

SECTION A-A

SINGLE METER BOX INSTALLATION FOR DUAL 3/4" MANIFOLD

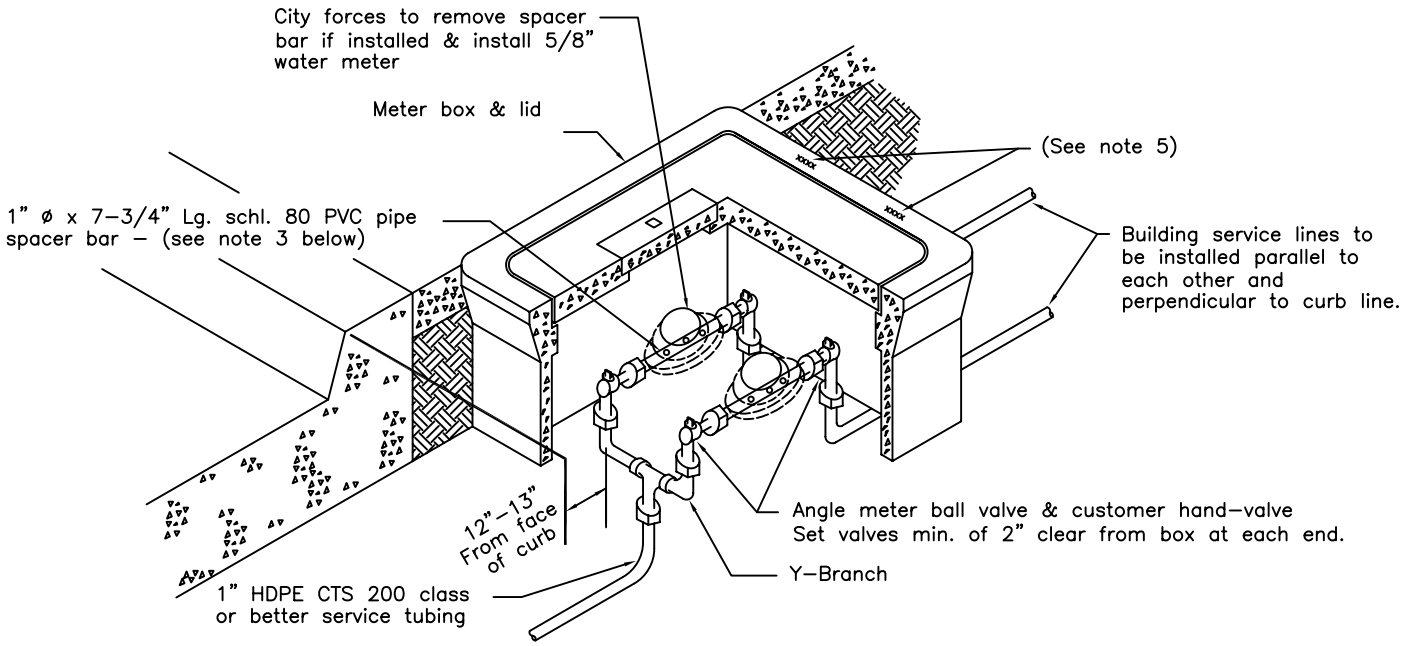

NOTES:

1. Meter box to be installed so that reading lid is centered over the meter registers.
2. In traffic loading areas, install two individual meter boxes and replace U-branch with field-made manifold.
3. Contractor to install schl. 80 pvc spacer with threads on both ends. Drill 1/2"ø holes @ 2" O.C. through pipe after testing service lateral.
4. Meter box knockouts will not be allowed.
5. Prior to meter set, address to be clearly marked on topside lip of meter box over each service with permanent felt marker.

City of Lakeport		
1" DUAL WATER SERVICE LATERAL		
SCALE: NONE	DATE:	
DWN: CHK:	APPROVED	FILE NO.