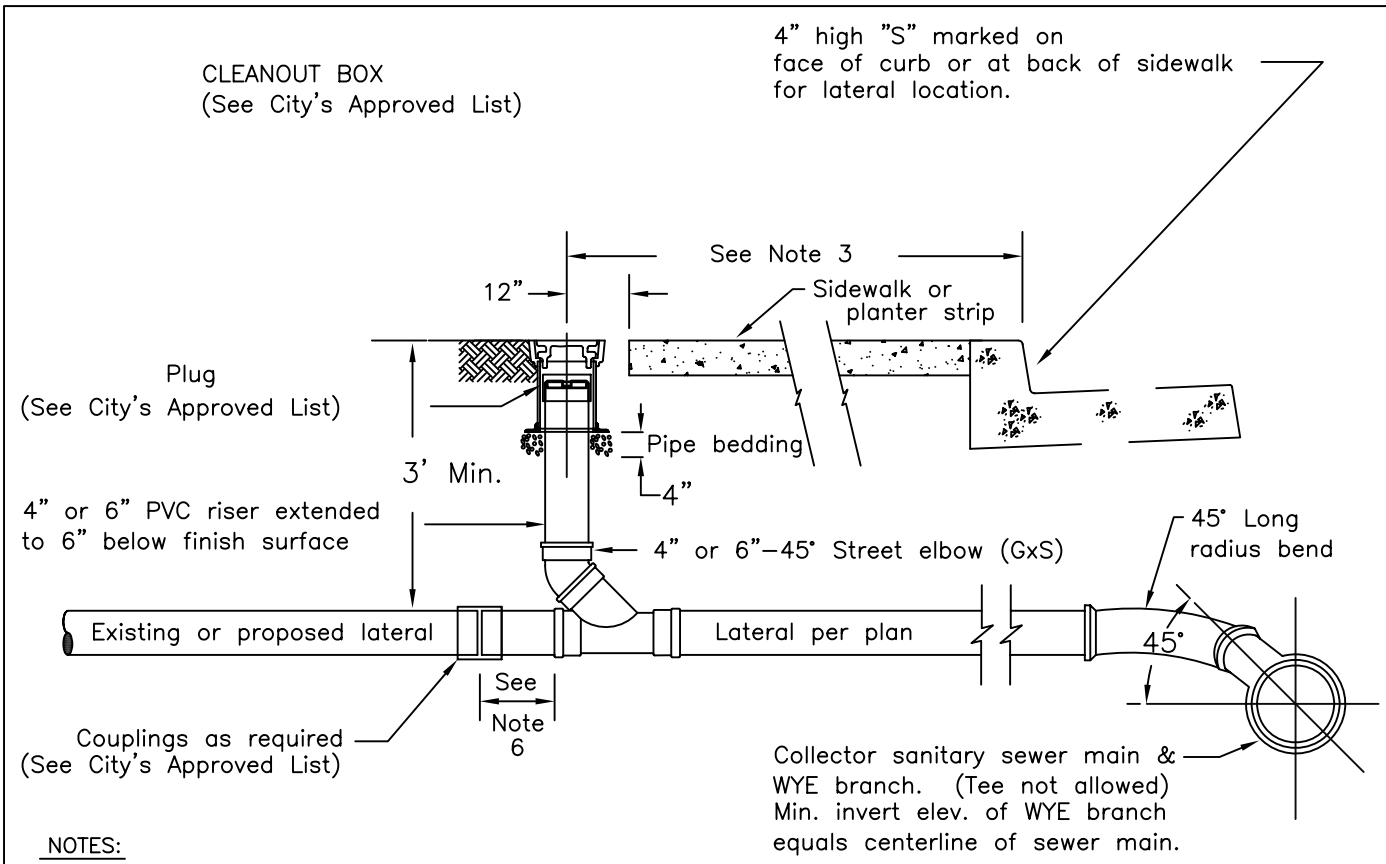

NOTES:

1. The sewer service lateral shall be of sufficient depth to adequately serve the building site, and in no case shall be less than 3 FT. deep at the cleanout unless otherwise authorized by the City.

2. Where problems are anticipated in providing sewer service to a given building site, the lateral invert at the cleanout shall be staked by the owner's engineer.

3. Cleanout must be installed within the Public Right of Way or P.U.E. Cleanout to be installed 36" from face of curb. Where service is in driveway, install cleanout 18" behind apron.

4. In cases where the cleanout installation conflicts with existing facilities, the contractor shall verify any alternate location with the City prior to installation.

5. Minimum 2% slope for 4" laterals and a min. 1% slope for 6" laterals are required unless a variance is specifically approved by the City.

6. A minimum of 12" when connecting to existing sewer lateral or extend to 1' behind P.U.E. or sidewalk for new construction.

7. For new construction, install cap or plug at end of service lateral.

8. Lateral material shall be PVC SDR 26 or SDR 35, Ductile Iron pipe.

9. Cleanout components shall be the same size as the lateral.

10. Tap fittings on mains smaller than 12" may only be used under the approval of the City.

LATERAL CONNECTIONS TO EXISTING MAINS:

Main Size & Material	Connection Type	Couplings
6–10" ACP, PVC	See City's approved list	See City's approved list
6–10" ACP, PVC	See City's approved list	See City's approved list
6–10" PVC, ACP	See City's approved list	See City's approved list
12" and larger	Tap fitting see City's approved list	See City's approved list

City of Lakeport

4" & 6" SEWER
SERVICE LATERAL
and CLEANOUT

SCALE: NONE	DATE: April 04	
DWN: CHK:	APPROVED MEB	FILE NO.

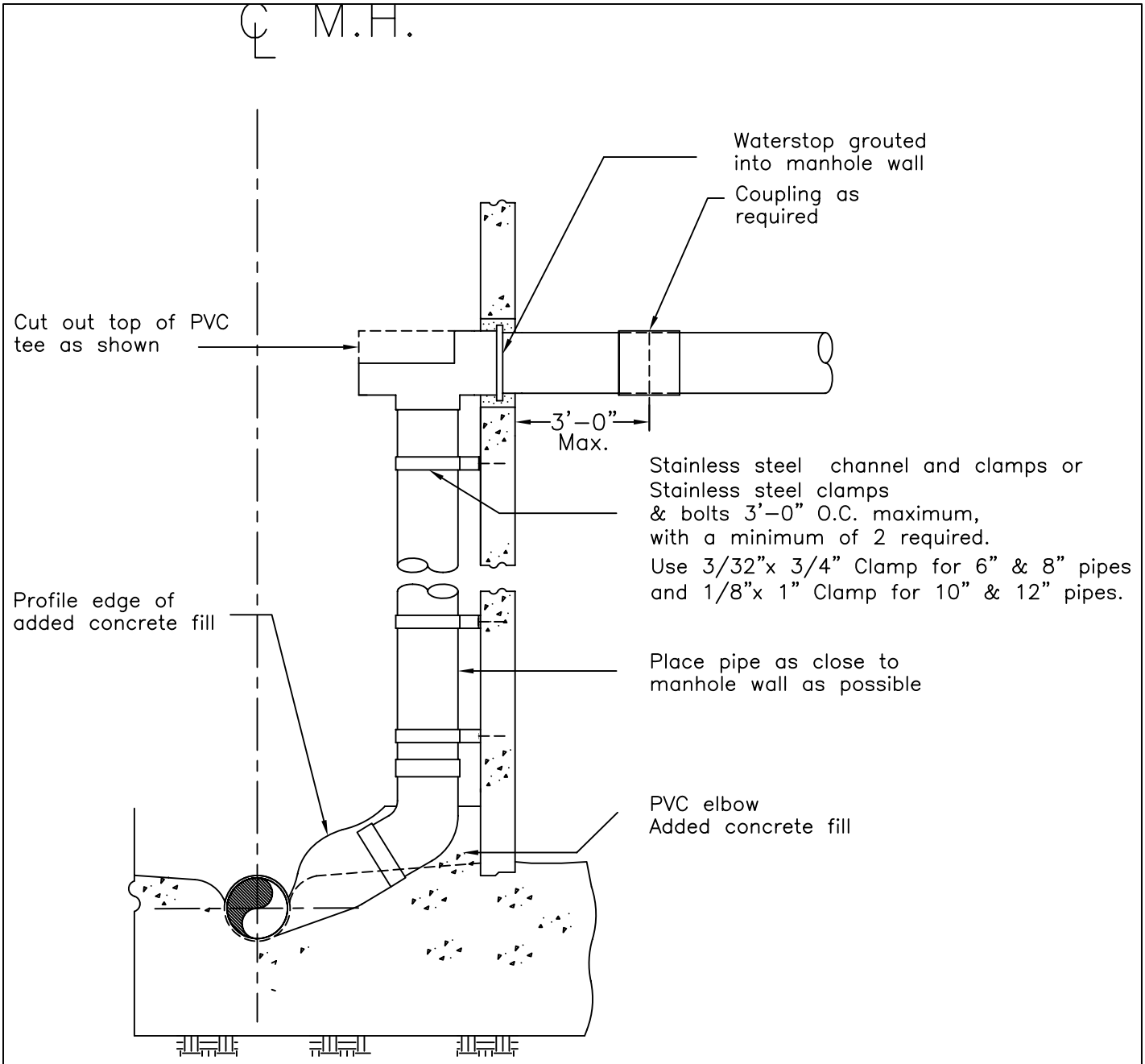

NOTES:

1. Manholes constructed using this standard shall be 60" in diameter and installed in conformance with City Standard. Use 72" MH where there are two drop connections.

2. Enclose elbow in concrete. Form smooth channel with sweep to manhole flowline.

3. Install waterstop in accordance with manufacturer's instructions as shown.

4. PVC pipe and fittings shall have same nominal size and SDR rating as incoming pipes.

City of Lakeport		
INSIDE DROP MANHOLE		
SCALE: NONE		DATE: Jan 2003
DWN: MEB CHK:	APPROVED	FILE NO.

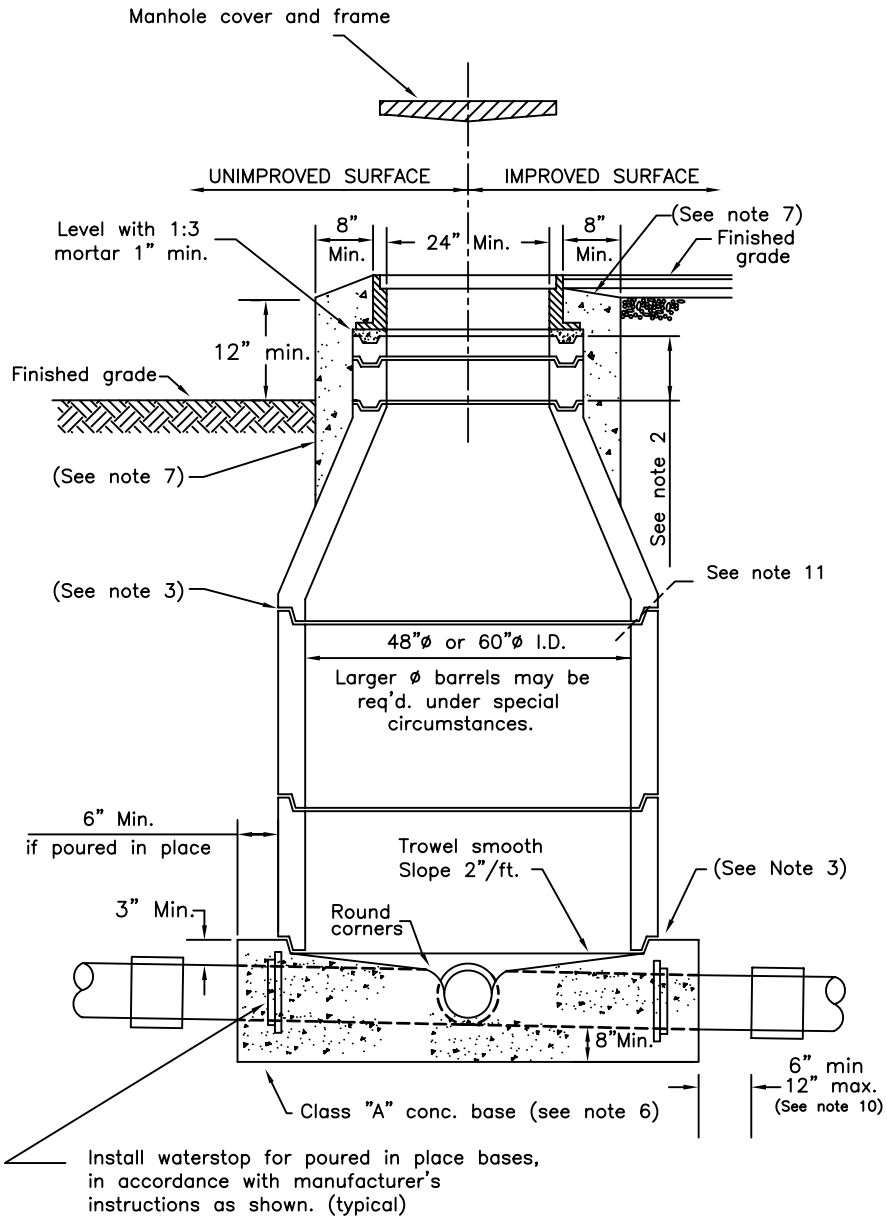

Eccentric manhole taper, cover & grade rings to be located over downstream pipe.

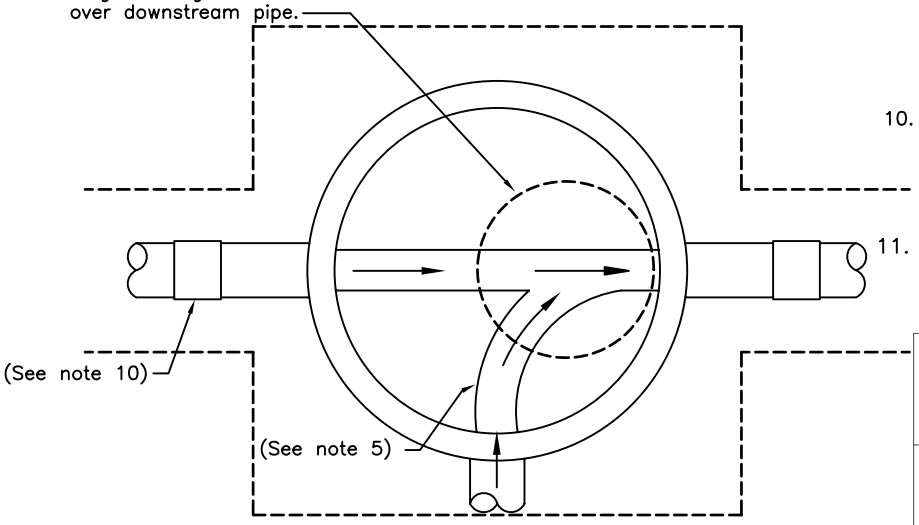

MANHOLE BASE

CHANNELIZATION PLAN AND LOCATION OF ECCENTRIC MANHOLE COVER

NOTES:

1. When manholes are installed in un-improved areas, the top of the cover shall be a min. of 1 foot above grade.
2. Min. of one 3" grade adjustment ring. Max. height of grade adjustment rings = 20". Alternately, contractor may cast grade adjustment rings in place.
3. Set all barrel sections & taper sections in plastic gasket, Ram-nek or approved alternate. Typical joint use (1) 3/4"x 2-1/2" Ram-nek seal, (2 seals in high water table areas).
4. Cone section (taper) must be concentric for 48"ø manhole or eccentric for 60"ø manhole unless otherwise specified and approved by the City
5. After lower ring section is set, break out top half of pipe flush with inside face of M.H. wall and construct shelf and u-shaped channel. Make elevation changes gradually and directional changes with smooth curves. Slope and size of channels shall match upstream and downstream pipes. Manhole channels with a horizontal change in direction of 30° or more shall have a minimum drop of 0.1' across the manhole or shall match the slope of the pipe, whichever is greater.
6. Poured-in-place base shall be poured full thickness on undisturbed soil. Precast base to be from City approved list and placed on 6" minimum of 3/4" drain rock installed against undisturbed earth.
7. Class "A" conc. collar shall be 2" below finished grade.
8. Standard manhole barrel section per ASTM C478.
9. 48"ø I.D. M.H. to be used for sewer mains less than 18"ø. 60"ø I.D. M.H. to be used for all trunk and collector sewers 18"ø to 48"ø or where drop fittings are used.
10. Flexible pipe coupling is required on all pipe other than SDR 35 PVC pipe. Flex coupling to be installed in mainline trench and out of manhole excavation.
11. 60" Dia. Manholes are required for main lines 18" or larger in Dia.

City of Lakeport

STANDARD PRECAST CONCRETE MANHOLE for SANITARY SEWER

SCALE: NONE	DATE: Jan. 2003	
DWN: CHK:	APPROVED	FILE NO.

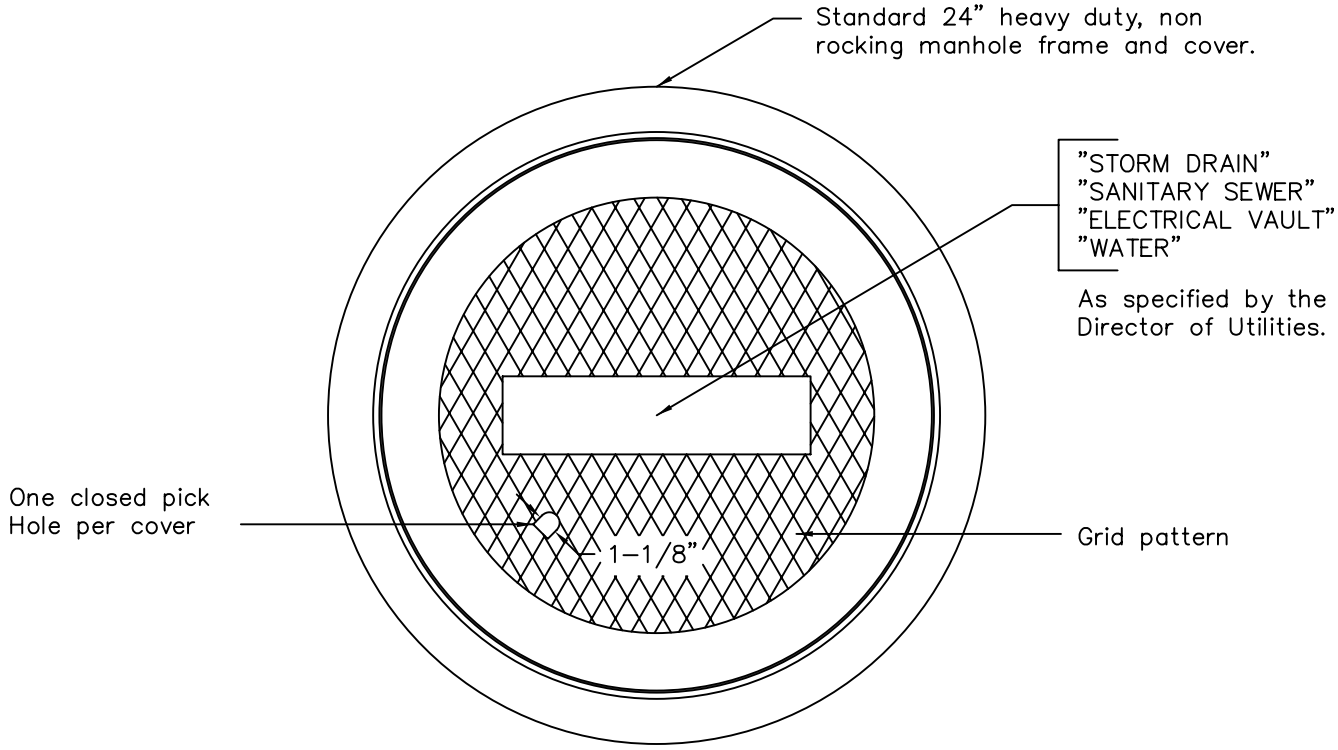

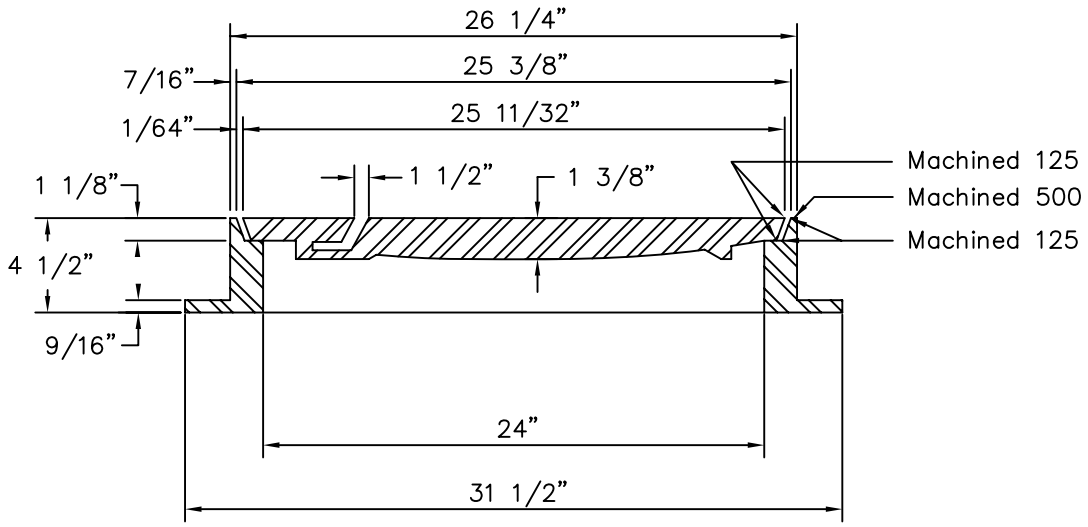

NOTES:

1. Specify sanitary sewer, storm drain, electrical vault, or water when ordering. All castings shall be dipped in approved ASPHALTUM or BITUMINOUS Paint.

2. All material used in manufacturing shall conform to A.S.T.M. designation A-48 Class 35 B, or of United States Government Specifications QQ1-652b.

3. Minimum weight components: Cover - 130 pounds
   Frame - 135 pounds

4. Bolt down covers are required on all sewer mains located in easements, on school grounds, through parks, and on any trunk sewers larger than 12" in diameter. Coat the bolt threads on the final bolt up with "never cease" or teflon based pipe dope.

APPROVED MANHOLE FRAME & COVER

See City Approved List

City of Lakeport		
MANHOLE FRAME and COVER		
SCALE: NONE	DATE: Jan 2003	
DWN: CHK:	APPROVED	FILE NO.

APPROVED FRAME & COVER

See City's Approved List

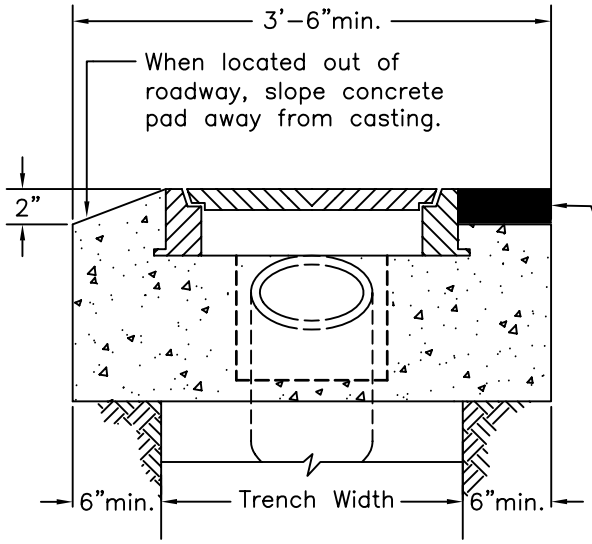

SECTION A–A

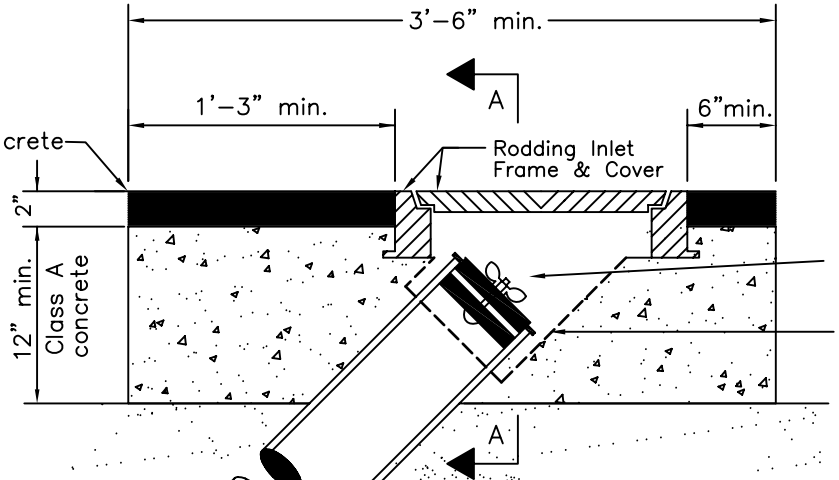

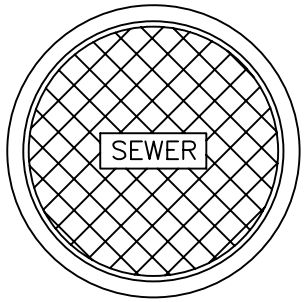

PLAN VIEW

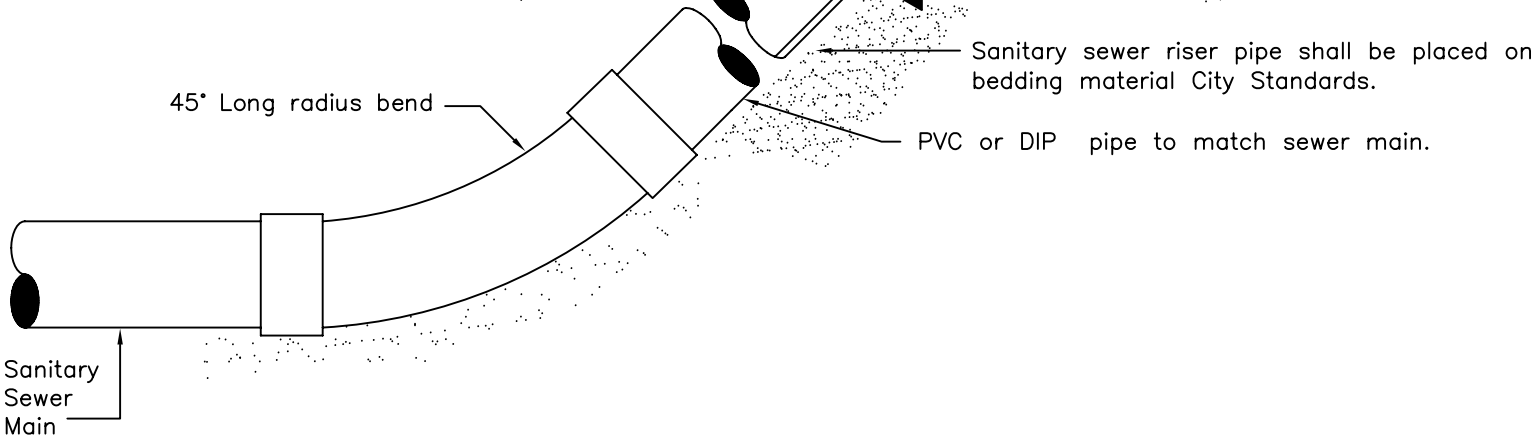

Note: To be used for main sizes 10" or less and where sewer main will not be extended.

City of Lakeport	RODDING INLET	SCALE: NONE
		DATE: April 04
		DWN: CHK: MEB APPROVED
		FILE NO.

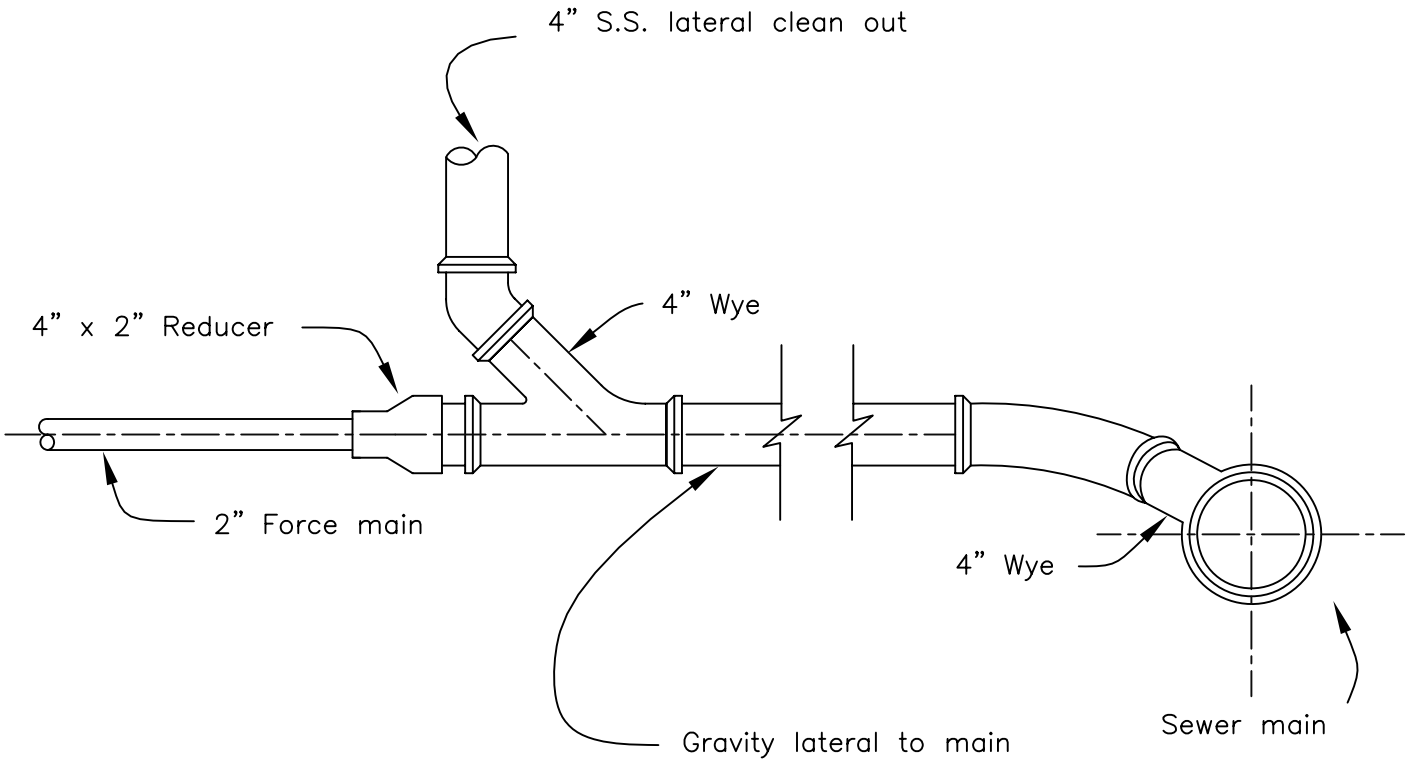

NOTES

1. Must be used for all private sewage lift station discharges. No discharges may be made directly to the collector sewer, trunk sewer, or manhole.

2. Any alternate design must be approved by the City.

City of Lakeport		
DISCHARGE for PRIVATE FORCE MAIN		
SCALE: NONE	DATE:	
DWN: CHK:	APPROVED	FILE NO.

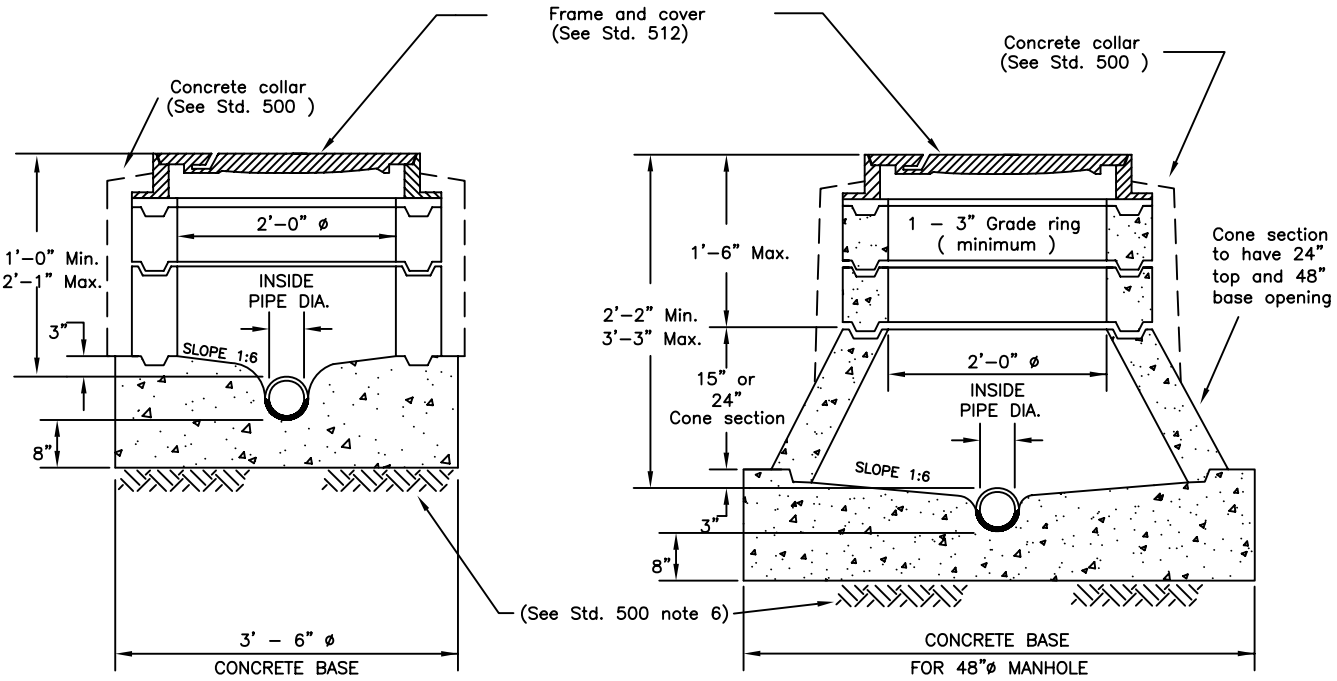

TYPE "A" MANHOLE

TYPE "B" MANHOLE

SHALLOW MANHOLE DETAILS

NOTE – See Std. 500 for typical construction details

NOTE – Type "A" Manhole to be installed only where specifically approved by the Director of Utilities.

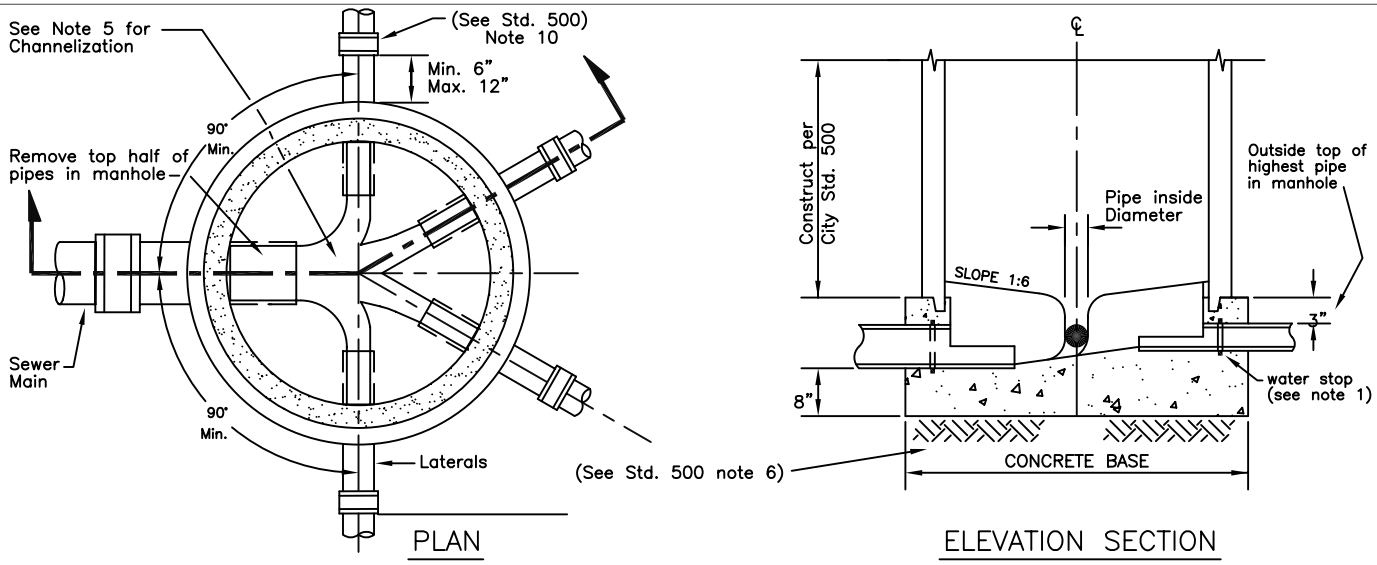

PLAN

ELEVATION SECTION

JUNCTION STRUCTURE FOR MULTIPLE LATERALS

NOTES:

1. An approved water stop shall be installed on all pipe entering or leaving a manhole and centered under manhole wall as shown.
2. Generally, the elevations of the top of all pipes entering the manhole base block shall be the same.
3. The maximum number of laterals to be connected to a manhole is (4) four.
4. See Std. 500 for manhole construction details.
5. The channels shall be formed to provide smooth flow through the manhole to the satisfaction of the City Engineer.
6. Channels and laterals through the exterior of the base shall be constructed radially.

City of Lakeport

SHALLOW MANHOLES

JUNCTION STRUCTURES
FOR MULTIPLE LATERALS

SCALE: NONE	DATE: Jan 2003	
DWN:	APPROVED	FILE NO.
CHK:		