1.

SEWER SYSTEM DESIGN STANDARDS

Adopted by the Santa Rosa City Council
Resolution No. 25372
September 10, 2002

TABLE OF CONTENTS

I. PURPOSE 2
II. REQUIREMENTS FOR IMPROVEMENT PLANS AND SUBDIVISION MAPS 2
III. SEWER MAINS - GENERAL 3
IV. CONNECTION TO AN EXISTING PUBLIC SEWER MAIN 4
V. MATERIALS 5
VI. ALIGNMENT 5
A. Horizontal 5
B. Vertical 6
VII. MAIN SIZING CRITERIA 6
VIII. SLOPE OF SEWER MAINS 7
IX. MAIN / LATERAL COVER 8
X. MANHOLES AND RODDING INLETS 8
XI. SEWER LATERALS 9
XII. ABANDONMENT OF SEWER MAINS AND SERVICES 10
XIII. EASEMENTS 11
XIV. ACCESS ROADS 12
XV. SEWER FORCE MAINS 12
XVI. INDUSTRIAL WASTE DISCHARGE PERMITS 13
XVII. LIFT STATIONS 13
A. General Requirements 13
B. Pumping Equipment 16
C. Lift Station Piping and Valving 18
D. Electrical Equipment 18
E. Telemetry 19
F. Standby Generator 24
G Gas Monitoring System 26
H. Details Required on Improvement Plans 26
I. Record Drawings and Manuals 27
Example Single Line Diagram 28

APPENDIX "D" - SEWAGE PEAK LOAD FACTORS VS. POPULATION
SEWAGE DESIGN FLOW CONTRIBUTION 29

SEWER SYSTEM DESIGN STANDARDS

I. PURPOSE:

To provide guidelines for design of sewer utilities projects and thereby reduce the time required for processing the plans. These guidelines do not include, but may reference, additional conditions which may be promulgated by all other pertinent ordinances, codes and official policy set forth by the Utilities Department, other departments of the City of Santa Rosa, or other government agencies. These guidelines establish minimum acceptable design criteria. More stringent requirements may be imposed by the Director of Utilities based on specific project conditions.

It is the responsibility of the design engineer to initiate written requests for approval of any design concepts that differ from these criteria, to verify additional requirements imposed, to perform any necessary calculations or studies, and to resolve specific design problems with the appropriate agency, department, or division.

II. REQUIREMENTS FOR IMPROVEMENT PLANS AND SUBDIVISION MAPS

A. Provide a detailed utility plan showing onsite and offsite sewer systems, and their connections to existing City maintained sewer facilities. Show any septic systems existing or to be abandoned.

B. For subdivisions, annotate the local agency information sheet of the Subdivision Map with information that is needed to notify property owners of requirements for connection to City Sewer System. These include, but are not limited to:

1. payment of fees prior to issuance of Building Permits;
2. lots requiring installation of sewer backflow protection;
3. private sewage grinder pumps; and
4. public sewer access requirements, such as gates or access roads.

The appropriate information may be obtained from Utilities Engineering.

C. It is common for a project on one property to be dependant on the construction of sewer by another project or phase of the same project. Sewer system designs will incorporate any off-site sewer that is required for the connection to an existing public main.

III. SEWER MAINS - GENERAL

A. Sewer systems will be designed in public streets whenever possible. When not in public streets, the following conditions must be met:

1. Ductile iron pipe must be used from manhole to manhole when outside of roadways; and

2. In general, lateral connections will not be allowed in easements but where necessary must be accessible and easy to locate; and

3. Bolt-down lids are required on all manholes located in easements, on school grounds, through parks and on any trunk sewers larger than 12" diameter.

B. Private sewer systems vs. public sewer systems:

In general, public sewer systems will be used only when they serve multiple lots and suitable access can be provided for maintenance reasons. Private sewer systems will only be used when they serve single lots or when they serve multiple lots and adequate access cannot be provided for public maintenance purposes. (See the City of Santa Rosa Sewer and Water Utility Maintenance Policy adopted by City Council Resolution No. 14853 in Water Design Appendix "B.")

C. Extent of sewer main improvements will be as follows:

1. Any offsite, downstream sewer system improvements needed to serve the project must be shown on the improvement plans, including upgrades to existing mains that may be required as a result of an approved capacity study or modeling effort.

2a. In general, sewer mains must be designed at least across one-half of the property frontage or to the most upstream service connection, whichever is greater; or

2b. Where the project is required to provide new street improvements over the sewer alignment and the sewer will serve properties upstream of the project, the sewer main must be designed across the full property frontage or to the limits of the street improvements, whichever is greater.

3. When a sewer main extension ends at a manhole and the sewer will be extended further in the future, include in the design a 3' long stub out of the manhole with a plug or cap for future connection.

D. Streets with both water and sewer mains must be at least 20 feet wide, face-of-curb to face-of-curb; one utility only: at least 16 feet wide; no water or sewer mains in alleys.

IV. CONNECTION TO AN EXISTING PUBLIC SEWER MAIN.

A. Connect new mains to existing at existing manholes or by constructing a new manhole over the point of connection.

B. Where an existing sewer main is to be extended, remove the existing plug, cleanout, or rodding inlet and install a manhole. The main may be extended without installation of a structure only if it is on the same line and grade, the pipe size and material are the same, and the manhole spacing is adequate.

C. Elevations of mains connecting to existing sewer mains will be as follows:

1. Side sewer mains connecting to an existing main at an angle of 30 degrees or greater will be at least 0.1' higher than the existing.
2. Connect sewer mains so that the crown of the smaller main is no lower than the crown of the larger main.
3. Connections to Trunk Sewers will be made so that the invert grade of the new main will be no lower than the crown of the Trunk Sewer.

D. Where laterals are the same size as the main, connection must be made with a manhole. Use a wye for all other lateral connections except as in "G" below.

E. For lateral connections to existing mains 12" and larger, use taps and saddles per City Standard 513.

F. Lateral connections to Trunk Sewers 15" and larger are generally not allowed except with the specific approval of the Director of Utilities.

G. Approved alternatives for multiple connections, such as for grouped flag lots or multiple lots off private driveways are:

1. Up to 2 joint trenched sewer laterals may be connected to the main using wyes at least 1' apart. (Taps or saddles where allowed must be a minimum 1' apart.)

2. A private 6" main may connect to the public main at a manhole and extend to the services onsite. This alternative requires a joint maintenance agreement or homeowner's association.

3. Up to 4 laterals may connect to a junction structure similar to Standard 502.

H. In most major streets, or where the street surface is less than 5 years old, installation methods other than open cutting may be required. The Encroachment Officer or the City Engineer / Director of Public Works will determine the requirements based on the condition of the existing street.

V. MATERIALS

A. Sewer service laterals will be Polyvinyl Chloride (PVC), SDR26 or SDR35, or Ductile Iron Pipe (DIP).

B. Gravity sewer mains up to and including 12" will be PVC, SDR26 or SDR35, or DIP.

C. Materials for pipes larger than 12" will be approved by the Director of Utilities.

D. Sewer force mains will conform to the material requirements for water mains.

E. If a gravity sewer main is installed outside of a paved roadway, ductile iron pipe is required.

F. In general, use the same pipe material from structure to structure.

G. Use of Asbestos Cement Pipe is not allowed under any circumstances.

VI. ALIGNMENT

A. Horizontal

1. Conform to the State of California, Department of Health Services, "Criteria for the Separation of Water and Sanitary Sewer." (See Appendix "A" in Water System Design Standards.)

2. Horizontal separation from storm drains or other sewer mains will be a minimum five feet clear between pipes except at crossings.

3. Horizontal separation from other utilities, such as gas, underground electric, underground television cable, etc., will be a minimum of four feet clear between the pipes except at crossings.

4. In general, design public sewer mains in straight street sections to run parallel to the street centerline. All public mains must be a minimum five feet clear from all structures, building overhangs, gutters, property lines or edge of

easements and 3 feet clear from all monuments, and/or lips of gutters. The alignment will be designed so that any 48" manhole shall be centered a minimum of 3 feet from the lip of gutter and any 60" manhole shall be centered a minimum of 4' from lip of gutter.

5. In curved streets, design the sewer alignment generally on one side of the centerline to allow installation of other facilities such as water, storm drains, etc. without using transverse crossings. Provide an alignment such that no part of the sewer main is less than 1 foot from the lip of gutter. Structures must be designed in accordance with subsection VI-A(4) above.

6. Horizontal curves in gravity sewer mains are not allowed.

7. All sewer main trenches that are parallel to and deeper than the footing of any adjacent structure must be at least 45 degrees from the footing as required in the Uniform Plumbing Code. Any exceptions must be approved in writing by the Director of Utilities and the Director of Building and Code Compliance.

B. Vertical

1. Conform to the State of California, Department of Health Services, "Criteria for the Separation of Water and Sanitary Sewer." (See Appendix "A" in Water System Design Standards.)

2. Generally provide a minimum of six inches of vertical separation from storm drains or other utilities, such as gas, underground electric, underground television cable, etc. When the minimum cannot be maintained, plans will indicate installation of felt expansion material or equivalent between facilities. To protect the sewer main from distorting under extreme loads, other measures, such as concrete encasement or ductile iron pipe, may be submitted for approval of the Director of Utilities.

3. Vertical curves in gravity sewer mains are not allowed.

VII. MAIN SIZING CRITERIA

A. Public mains will be sized to serve the entire tributary area at buildout densities conforming to the General Plan. Engineers for large developments may be required to provide trunk or collection system calculations or have a wastewater model run performed.

B. The design flows will be based on the following criteria:

1. Use population densities for various zoning on the chart "Sewage Contribution" in Appendix "D." Average domestic flow will be 125 gallons per person per day.

2. Multiply average flow as determined in VII-B(1) above, by Peak Load Factor from the graph "Sewage Peak Load Factor vs. Population," also in Appendix "D," to obtain the design flow.

3. Public sewers will be designed to carry infiltrated water at the rate of 7% of the design flow in addition to the volumes above.

C. Design all gravity sewers to achieve a minimum velocity of 2 fps when the pipe is flowing full. Lesser velocities require the approval of the City Engineer. When analyzing the existing or proposed sewer systems, use Manning's Formula to determine the design flow and velocity. Use n = 0.013.

IV. The minimum size is 8" in diameter.

VIII. SLOPE OF SEWER MAINS

A. The sewer must be designed with a slope to be able to serve its entire tributary area. The preferred minimum slope for gravity sewers is 0.005. When conditions require, flatter slopes may be approved in accordance with the following:

The minimum slope for an 8" sewer is 0.0035.
The minimum slope for a 10" sewer is 0.0025.
The minimum slope for a 12" sewer is 0.0020.
The minimum slope for a 15" sewer is 0.0015.

B. The maximum slope for gravity sewers is 0.15, or 15' per 100'. Considering relevant factors such as steep terrain, steeper sewers may be allowed with the following conditions:

1. Use with restrained joints.

2. Provide trench dams and drainage measures to prevent a buildup of hydrostatic pressure in trenches.

3. When a sewer with a slope greater than 0.15 passes through a structure with a horizontal change of direction in excess of 30 degrees, a special design of the base channelization is required to prevent overflows and yet allow for routine maintenance operations.

C. Slopes through manholes:

1. When sewers of uniform slope pass through a manhole, the slope will be maintained and the invert at the center of the manhole will be given.

2. When sewers change slope at a manhole, incoming and outgoing invert elevations will be given.

3. Provide sufficient drop through a manhole to compensate for energy loss caused by change of alignment. A minimum drop of 0.1 foot is required for a change of alignment greater than 30 degrees.

4. When pipe sizes change at structures, design the inlet crown at least as high as the outlet crown.

IX. MAIN/LATERAL COVER

A. Cover is the distance from the top of the pipe to final finished grade measured directly over the pipe.

B. Minimum cover for all sewer mains and laterals will be 36". The Director of Utilities may approve shallower installations but in no case will cover be less than 24".

C. Where cover is less than 36", special construction techniques must be approved such as concrete encasement, use of ductile iron pipe, concrete cap over the trench or the use of controlled density backfill.

X. MANHOLES AND RODDING INLETS

A. A manhole is required at every horizontal or vertical change in alignment.

B. Maximum distance between manholes is 300 feet.

C. A manhole is required at the end of every main in excess of 200 feet in length.

D. Rodding Inlets may be installed in lieu of manholes at the end of a sewer main where the distance is less than 200 feet to the nearest manhole and the main size is 10" or less.

E. 60" diameter manholes are required for mains 18" or larger in diameter.

F. The manhole will be designed such that the angle in the horizontal plain between the downstream and any incoming sewer is a minimum of 90 degrees.

G. Stubs provided out of manholes for future extension will have rodding inlets provided when more than one length of pipe is installed or where service laterals are connected to the stub.

H. Private sewer mains must connect to the public main at a manhole.

I. Standard drop manhole installations are required when the difference in elevation between the incoming and outgoing sewer is greater than 2 feet. While not encouraged, drop manholes may be required because of some physical restraints. They may not however, be used to merely avoid extra depth of trenching unless unusual circumstances exist. Upstream slope changes should be used to avoid the need for a drop manhole.

J. When one drop connection is required, use a 60" diameter manhole. When two or more drop connections are required, use a 72" diameter manhole.

K. Minimize the number of drop manholes.

XI. SEWER LATERALS

A. Provide a separate lateral for each lot.

B. The minimum sewer lateral size is 4".

C. Sewer laterals will be sized according to requirements of the Uniform Plumbing Code, the City Engineer and determinations by the Design Engineer.

D. Sewer laterals will be located on the property frontage, defined as either the front or side boundary line of a parcel which abuts on a street.

E. Laterals will not be located in easements when gravity service can be provided to the property frontage.

F. When reasonable public vehicular access cannot be achieved, multiple lots may be served by a private main, providing approval by the Chief Building Official is received and appropriate maintenance agreements are approved by the Department of Community Development.

G. The minimum slope of sewer laterals is 2% or 1/4" per foot for 4" laterals and 1% or 1/8" per foot for 6" laterals, unless otherwise approved by the Building Department, and will be designed at a depth sufficient to serve the entire building envelope of the parcel. Provide the slope and/or invert grade at the cleanout for any service lateral that must be installed at a slope and/or depth different from the minimums shown on the City Standard Plans.

H. All sewer laterals, from property line or edge of easement to the point of connection with the main line or a manhole, will generally be perpendicular to the curb alignment or easement and will have an angle of intersection with the downstream section of sewer of no less than 90 degrees. No lateral alignments adverse to the flow of the main will be permitted.

I. Locate sewer laterals outside of driveway areas where possible and where driveway locations are known. In general, sewer laterals will be in the center third of lots when driveway locations are unknown and a minimum of 10 feet from trees whenever possible. For hillside development, place sewer laterals on the low side of property frontages when not in proposed driveway.

J. Sewer laterals serving lots or buildings with plumbing fixtures below the nearest upstream sewer manhole rim require an approved backflow overflow device.

XII. ABANDONMENT OF SEWER MAINS AND SERVICES:

A. Any existing sewer mains and service laterals that will not be used will be abandoned and the following must be noted on the Improvement Plans:

1. Sewer mains that are to be abandoned will be securely closed at all pipe ends with a cap or at manholes with a concrete plug. Further, mains 12" and larger must be filled with a sand slurry or other suitable material per current City Standards.

2. Sewer laterals in streets that have been constructed or overlain within the last five (5) years will be plugged behind the curb line or outside the edge of pavement.

3. Sewer laterals in streets that have not been constructed or overlain in the last five (5) years will be abandoned by excavating at the main, removing the wye, and repairing the main per current City Specifications. If the connection to the main is a tap or saddle, it will be removed and a full circle repair clamp installed. When a wye is removed that is within 18" of a pipe joint, the repair will be extended to include the joint.

XIII. EASEMENTS

A. An easement must be provided over any public sanitary sewer when it is installed outside a public right-of-way.

B. The easement must be a minimum of 15' wide if it only contains a sewer main or 20' wide (or wider) if it contains another facility, such as water, storm drain, or other utility. The easement will be dedicated as a "public sewer easement" if it contains sewer only. It will be dedicated as a "public utilities easement" if it contains other facilities as well.

C. Easements must be configured to encompass all publicly-maintained appurtenances, such as service laterals up to the cleanout, and will be generally centered over the facility. Separate access easements may be required depending on site conditions. When sanitary sewers are to be installed along a property line the easement will be wholly contained on one parcel.

D. All property restrictions placed as a result of dedication of easements will be so noted on the supplemental sheet of the Subdivision Map, or on the Easement Deed if the easement is not dedicated as part of a subdivision. Typical required notes as applicable are:

1. No structures may encroach on, above, or below the surface of the ground in any public easement. This includes footings of foundations, eaves from the roof of any adjacent structure, pools, ponds or outbuildings on slabs or foundations. Decks, sheds, or other structures which may be easily removed for maintenance of the sewer system may be allowed at the discretion of the Director of Utilities.

2. No trees may be planted in a public sewer easement without first obtaining approval of the Director of Utilities. Trees may be allowed to the extent that damage to the sewer system does not occur from root intrusion and adequate access can be provided for maintenance and repair vehicles.

3. The Utilities Department will take due caution when performing maintenance or repair of sewer systems in easements, but will not be responsible for repairs or replacement of trees, landscaping or structures not specifically approved by the Director of Utilities.

XIV. ACCESS ROADS

A. Clear access must be provided and maintained to all structures on the sewer system:

1. All-weather vehicle access roads are required to every structure on the sewer system. Access roads must be a minimum of 12' in width and must be provided with turnarounds per City Standard 206 when the back-up distance for any maintenance vehicle exceeds 100'.

2. The design of access roads must be included with the sewer system design plans. At a minimum, the design will conform to the requirements of Standard 216. Include adequate drainage measures in the design to prevent damage to the access roads from storm water.

3. Gates must be provided for access through any fence crossing a public sewer easement. Where vehicular access is required for maintenance, minimum 14' wide gates must be provided with sliding gates preferred. Where vehicular access is not required, 4' wide gates for pedestrian access must be provided and will be located to permit visual access between sewer structures.

4. The maximum grade allowed at any point on an access road is 15%. The maximum cross-slope for any access road is 5%.

XV. SEWER FORCE MAINS

A. Locator boxes will be placed at every horizontal change in alignment or a maximum of every 500'. No. 12 insulated copper wire will be laid on top of and along the entire length of all nonmetallic pipe and will be extended to the surface at all box locations and manholes sufficiently for locator equipment to be attached. Fasten the wire to the top of the pipe so as not to be displaced or broken during backfilling, such as by affixing the wire to the pipe with duct tape at approximately 10 feet intervals.
(See Water System Construction Standard Specifications Section 99- 1.13)

B. Boxes will conform to valve box requirements per Standard 877 with the lids clearly marked "sewer."

C. Private force mains must connect to the City sewer system per Standard 515, and may not discharge directly into sewer manholes. Public force main connections must be detailed on the plans, but also may not discharge directly into sewer manholes.

D. Provide details for a swab launching station for force main preventative maintenance. Launching facility will be detailed on lift station plans and must accommodate using lift station pumps for propulsion. Provide necessary valving. Contact Utilities Engineering for suggested design details.

XVI. INDUSTRIAL WASTE DISCHARGE PERMITS

A. Most commercial uses require Industrial Waste Discharge Permits which may be obtained from the Environmental Services Division of the Utilities Department.

B. Grease traps, grease and sand traps, grease interceptors, and sampling structures as may be required by the Division of Environmental Services must be shown on the plans submitted for permit approval, or referred to appropriate City Standard Plans.

C. Trash enclosures and other outdoor pad areas used for washing will be plumbed to the sanitary sewer system at grease interceptor or other connection point approved by Environmental Services. Preventive measures will be taken to eliminate the intrusion of any rainwater or surface runoff.

D. Wash pad areas will be diked and/or sloped so that the smallest area possible drains to the sewer.

E. A fixed roof will be installed over the wash area. Environmental Services may consider alternatives to a roof where it is not feasible.

XVII. LIFT STATIONS

A. General Requirements

1. Lift stations will not be allowed where an acceptable alternative gravity route exists.

2. Design the lift station to serve the entire tributary at build-out densities conforming to the General Plan, and in accordance with City peaking standards and I/I allowances.

3. Lift stations may be submersible pumping stations, package wet well/dry well stations or site designed vertical, dry pit, non-clogging, centrifugal pumping stations, depending on station size, head requirements and motor horsepower.

Table 1, below, outlines the allowable design criteria for each type of pump station, listed in order of preference:

TABLE 1
PUMPING STATION DESIGN CRITERIA

Station Type	Influent Flow Range (gpm)	Maximum TDH *	Maximum Motor Horsepower
Packaged wet well/ dry well	Up to 3000 gpm	Up to 45 feet	100 HP @ 1450 rpm
Vertical centrifugal	No restrictions	No restrictions	No restrictions
Submersible	Up to 2000 gpm	Up to 160 feet	100 HP @ 1800 rpm

* TDH = Total Dynamic Head. Submittal of calculations required.

4. Tandem pumping may be allowed where low flow, high TDH conditions exist, with expressed written permission from the Director of Utilities.

5. All pumps, regardless of station type, will be non-clogging, capable of passing a minimum 3" diameter sphere. All pumps, regardless of station type, will be single speed.

6. Lift stations are not allowed within the street right-of-way.

7. Provide a 12-foot paved access road with a 14-foot wide rolling gate preferred where possible, to allow service vehicles to be parked off the street and clear of the sidewalks. Turnarounds are required for stations constructed along heavily traveled streets. Provide service vehicle access to wet well.

8. Provide a reinforced concrete base slab sized adequately to counteract buoyancy. Provide supporting design calculations.

9. Provide a single surface pad over site that incorporates lift station access, wet well/dry well access and supporting generator and fuel supply tanks, as necessary.

10. Provide restrained flexible couplings on all outlet piping within 2 feet of the station wall.

11. Provide reinforced concrete supports for pipes between wet well and dry well, where appropriate.

12. Wet well to be minimum 72" in diameter with 4-hour capacity or as necessary to accommodate pumping equipment for submersible stations. For all other station designs wet well size will be based on good sanitary engineering practices. Provide resilient-seat gate valve on-line into wet well.

13. Provide 6" PVC emergency by-pass system consisting of a suction line and a discharge line and a standpipe equipped with a cap and cam-lock connector. Bypass will be located in a vault. Standpipe connects to force main through an AWWA resilient seat gate valve with stainless steel trim and a check valve. The suction and discharge lines will have gate valves for isolation. Adequately support all piping.

14. Provide 1-inch minimum water service with reduced pressure backflow preventor and piping insulation.

15. Provide rekeyable Almont locks for all padlock applications.

16. Provide Simplex keyless push button access control systems for all buildings.

17. Provide fall protection device for ladders that include winch and center post. Winch will be Miller M 52-50SS or approved equal. Center post will be Uni-Hoist Arm # UH 504-24 with top and back rollers or approved equal. Provide non-skid surface on ladder.

18. Provide a spare pump and air release valve prior to acceptance.

19. Provide calculations to determine the need for hydrogen sulfide suppression in force main.

20. Station piping, equipment and appurtenances will be painted in accordance with City of Santa Rosa Utilities Department standard colors as set forth in Table 2, below:

TABLE 2
CITY OF SANTA ROSA
PUMPING STATION COLOR CODES

TYPES OF EQUIPMENT, PIPING, VALVES	COLOR
1. Pump suction isolation valve	Blue
2. Pump discharge isolation valve	Red
3. Pump discharge check valve	Orange
4. Force main isolation valve	White
5. Emergency pump isolation valve	Yellow

6. Emergency pump check valve	Brown
7. Sump pump isolation valve	Black
8. Sump pump check valve	Orange
9. Mechanical seal pressure valve	Pink
10. Chemical isolation valve / piping	Purple
11. All electric motors	Blue
12. All sewer pumps and pipes	Green
13. All compressed air system	Per City
14. Standby generator	Per City

B. Pumping Equipment

1. Provide a minimum of two pumps and controls to alternate lead and lag pumping. Where required by Director of Utilities, 3 or more pumps may be required in a lead, lag, standby arrangement.

2. For each type of pump, provide one spare rotating mechanism to replace each pump type.

3. Provide one set of routine service replacement parts such as wear rings, bearings, and seals for the pumps.

4. Provide calculations used to determine the capacity of the wet well and the specifications for the pump.

5. Provide hour meters for each pump that records pump run time, only if the motor is operating.

6. Provide a magnetic flow meter on the discharge of the pump station. Meters may be in an approved vault. Display will be installed in pump station.

7. Packaged wet well/dry well stations

   a. Above ground lift station is preferred.

   b. Lift station standard is 7'-6" diameter, Fiberglass Reinforced Plastic underground lift station by Gorman-Rupp with above ground controls and underground pump shut -offs.

   c. All pumps, motors, internal valves and piping, level indicators, control switches, ladder, alarms, blower and dehumidifier will be manufactured and assembled as a package. Supply and warranty will be through one company.

d. The pumps will be self-priming, horizontal, centrifugal, sewage pumps. Pumps will pass a maximum solid, 3" diameter sphere.

e. All motors will be totally enclosed, fan cooled, premium efficiency.

8. Vertical centrifugal stations

a. The lift station will employ vertical, dry pit, single stage non-clogging centrifugal sewage pumps.

b. Pumps with mechanical grease seals will be provided with a grease reservoir.

c. All motors will be totally enclosed, fan cooled, premium efficiency.

d. Pumps will include an individual air bleed system from each pump to the wet well.

e. Seal water piping systems, where necessary, will be schedule 80 PVC or Type "K" copper. Seal water systems will be designed with drains.

f. Design of lift station enclosure for vertical centrifugal stations will be coordinated with the City Building and Fire Departments with respect to occupancy class and electrical and HVAC system design.

9. Submersible pumping stations

a. The lift station will consist of a minimum of two submersible centrifugal sewage pumps, guide rails, wet well access, discharge seal and elbow, motor control center, starters, liquid level control system and all hardware necessary to make a complete working system. Supply and warranty will be through a single company. Standards are ITT Flygt, Gorman Rupp Company or equal.

b. The pumps will be electric, submersible, centrifugal non-clogging units capable of passing a 3-inch sphere. Pump and motor will be suitable for continuous operation at full name plate load while the motor is completely submerged, partially submerged or totally non-submerged. All electrical equipment/panels will be above ground.

c. Each pump will be furnished with a discharge connection system, which will permit removal and installation of pump without the need for the operator to enter the wet well.

d. All hardware in wet well, chains, cables and slide rails will be 316 stainless steel.

C. Lift station piping and valving

1. When not included with package stations, all internal main lift station piping will be flanged, except as discussed in No. 2.

2. All main lift station pipes will have flexible connections (Victaulic or Dresser) to allow for disassembly.

3. All main piping will have manual vents and drains to allow draining of sewage prior to piping disassembly.

4. Resilient seat gate valves in manholes will be used for station wet-well isolation.

5. Cast iron, non lubricated eccentric plug valves with worm gear operators will be used for pump isolation valves. Valves will have stainless steel bearing, nickel seats, neoprene faced plugs and nitrile-butadiene packing. For package wet well/dry well stations, if space does not permit isolation valves for each pump use 3-way valves.

6. Main Pump Check Valves will be cast iron swing checks with external lever return. Check valve will not be installed in the vertical. Disc will be 316 stainless steel or cast iron with bronze trim. Pivot arm and bearing will be 316 stainless steel or cast iron with bronze trim. Pivot arm and bearing will be 316 stainless steel or bronze. Seat will be field replaceable with neoprene facing.

D. Electrical Equipment

1. Free standing electrical service and transfer switch will be heavy duty electrical weatherproof enclosure securely mounted in a manor acceptable to the Director of Utilities, a minimum of 24" above the ground. Provide a concrete pad around steel supports. Enclosure and equipment to be provided by Tesco, Challenger, Cutler-Hammer, or Square D. Provide 110-volt duplex, GFI, receptacle in a weatherproof box. The box will have 316 stainless steel hinges and hardware and will be factory primed and field painted per City requirements. Enclosures to be epoxy-coated.

2. Provide Killark connector for mobile generator with manual transfer switch. Generator plug will be a minimum of 36-inches above ground. See attached single-line diagram for wiring manual transfer switch.

3. If the lift station dry well is a confined space, provide explosion proof dry well lighting adequate to illuminate the ladder and the floor of the dry well.

4. Provide an exterior light in accordance with STD #601. Provide 12-inch diameter pole-mounted luminaires at 120V, 70W HPS.

5. Provide OSHA approved rubber mat in front of all indoor control panels.

6. Provide ability to operate station with one pump removed for maintenance, by utilizing a local-remote switch and no parallel switching in order to allow for proper lockout procedures. Provide local disconnect at motor per NEC.

7. Provide waterproof local control in dry well to operate pumps for testing.

8. Provide 25% additional spare wires and 2" conduits or oversize conduits to meet ultimate station capacity.

9. Drives will be Allen-Bradley or approved equal and provided with solid state smart type motor starters with a pump control option used to provide ramp starting and stopping of motors. The controller will have the following start modes: soft start with selectable kickstarts, current limit and full voltage.

E. Telemetry

1. Control Panels

All control panels will have the following general features.

a. Panels and enclosures will have NEMA ratings as shown on the drawings. In general the NEMA ratings will be:

   1) NEMA 3 316 SS for outside installations. Include sun shield.

   2) NEMA 12 for protected installations inside buildings.

b. Panel design will incorporate the following features:

   1) Provide a lamp with switch.

   2) Provide a 120 VAC duplex convenience outlet.

   3) Provide heating and cooling to maintain internal components within operating tolerances and to avoid condensation.

4) Provide 120 VAC uninterruptible power supply (UPS) or an equivalent DC voltage subsystem sized for 150% of peak load for all internal panel components for a minimum of 30 minutes run time.

5) Provide radio communications system compatible with CITY'S current SCADA system. See City personnel for specific frequency and any changes.

6) Provide a high temperature switch (alarm) for the control panel.

7) Provide an automatic alarm dialer to annunciate critical alarms.

2. Programmable Logic Controller

Provide a programmable logic controller to perform monitoring and control of the facility. Provide a large or small PLC as shown on the Drawings or specified in the Contract Documents.

a. For small PLC applications, provide one of the following:

1) Modicon Micro CPU 612,

2) Allen-Bradley MicroLogix 1500,

3) Siemens S5-95U, or

4) Tesco L2000

b. For large PLC applications, provide one of the following:

1) Modicon Quantum,

2) Allen-Bradley ControlLogix,

3) Siemens S7, or

4) Tesco Liquitronix 5/30

c. All PLCs will utilize the following features:

1) All analog inputs will be isolated with 4-20 mA current signal isolators.

2) All analog outputs will be isolated with 4-20 mA current signal isolators.

3) Provide two serial communication interfaces running MODBUS RTU mode.

4) Provide an operator interface panel.

5) Provide input and output points as defined in the specifications and drawings.

6) Provide 20% spare analog and digital I/O's.

3. Panel Mounted Devices

a. 24 VDC Power supplies: Power supplies will be linear, open frame supplies with a minimum capacity of 3.0 Amp manufactured by Acopian, Power One, or Solo.

b. Relays: Relays will be SPDT with a minimum 10 Amp rating by Idec, Potter & Brumfield, Turck, or Allen-Bradley.

c. Signal Isolators: Current isolators and converters will be by M-Systems, Wago, or Wilkerson.

d. Terminal Block System: Terminal blocks, fuse blocks, and disconnect blocks will be by M-Systems, Wago, Wilkerson, or Allen-Bradley.

e. Temperature Switch: Temperature switch will be used to monitor internal panel temperature for high temperature conditions. Range will be 0 – 250 degrees F. Provide cooling fans.

f. Interior Lighting: Provide all control panels with a fluorescent interior light of the same approximate width of the control panel located along the top of the panel. Provide light with a separate light switch.

g. UPS: Provide an uninterruptible power supply sized for 150% of calculated load with sufficient battery backup time for 30 minutes of operation. Provide American Power Conversion or Best Power Products.

h. Selectors and Pushbuttons: Provide corrosion resistant selectors and pushbuttons by Allen-Bradley or Square-D.

4. Wet Well Level Measurements

a. Provide continuous (analog) wet well level measurement by use of a reactive air cell bubbler system. Mount bubbler system components (compressors, pressure transmitter, valves, etc.) in control panel. Mount air cell 6 inches above the wet well floor. Use 304 or 316 SS tubing for all piping.

b. Use a differential pressure transmitter for pressure (level) measurement on the bubbler system. Use Rosemont model 1151 smart pressure transmitter or Endress & Hauser model PMD 230. Provide 0.5 inch NPT block and shutoff valves. Provide 0.5 inch NPT three-valve manifold for calibration.

c. Use duplex air compressors with manual alternation. Use WISA model 110 compressor or equal capable of supplying 5 psi air at 100 cfm.

d. Provide a normally open solenoid valve on the air supply line that can be used to build up pressure and supply a burst of air to clear the air cell periodically. Provide protection for controller.

e. Provide float for high-high level contact.

5. Record Drawings and Operations & Maintenance Documentation

a. As-Built Drawings: Provide as-built drawings showing physical location of components. Provide loop drawings (end-to-end wiring diagrams) meeting the ISA S5.4 standards with minimum required items plus optional items. Provide three (3) copies of all drawings and an electronic version in AutoCAD latest version.

b. Provide O&M Manuals for hardware.

1) Cover equipment comprising the system in the hardware instruction manuals for all equipment including third party equipment, provided as part of the SCADA system. Provide instructions for operation and maintenance of the installed system, as well as operation and maintenance instructions for the individual equipment units comprising the system.

2) Cover equipment comprising the system in the hardware instruction manuals for all equipment including third party equipment, provided as part of the SCADA system. Provide instructions for operation and maintenance of the installed system, as well as operation and maintenance instructions for the individual equipment units comprising the system.

3) Standard hardware manuals will be acceptable, provided that errata sheets are included to reflect the specific equipment provided.

4) Electronic CD-ROM hardware manuals are acceptable.

5) Provide three (3) copies of O&M manuals plus an electronic copy when available.

c. Provide O&M Manuals for software.

1) Provide complete, organized, and standardized documentation for operations centers, RTUs, PLCs, and other software provided as part of the SCADA system. In general, structure the documentation such that each level develops a different degree of detail. Begin with a broad approach (Systems Manual), focus on smaller pieces of the overall system

(Subsystem Documentation) and finally pinpoint the finest detail (Program Documentation).

2) Fully annotate and document every PLC program.

3) Provide three (3) copies of software O&M manuals plus an electronic copy when available.

6. Testing Requirements

a. Factory Acceptance Test (FAT): Fully test all SCADA components at the Contractor's facilities prior to shipping, installing, reprogramming, or reconfiguring the City's SCADA equipment. The purpose of the testing is to verify compliance with the specifications and correct deficiencies at the Contractor's facility and not in the field. Insofar as practical, test the functional, performance, and interface requirements. Test each control loop from terminal strips to the PLC.

b. Site Acceptance Test (SAT): After installation, fully test all SCADA components to verify compliance with the specifications. Insofar as practical, test the functional, performance, and interface requirements. Test each control loop from the instrument or terminal strip, through the PLC, to the City's central SCADA system. Tune all control loops. Test all control strategies.

c. Operational Availability Demonstrations (OAD): The OAD is a 90 day period of time during which the SCADA system will be utilized by the CITY in day-to-day operations. Its purpose is to test the SCADA system stability and completeness over time. Start the OAD upon written notice from the CITY and after successful completion of field testing. The OAD is considered successful if the system availability is 99.8 percent or better. The OAD will be restarted or repeated if availability is less than 99.8 percent. Final Completion will not be granted until OAD is passed.

7. Programming and Configuration Services

a. Configure the PLCs based on the configuration drawings, P&IDs, the Process Control Narratives and functionality as specified in other sections. Include all necessary constant and variables required to meet the Specifications whether shown on the drawings or not. Provide a fully functioning control system.

b. The Contractor will conduct coordination meetings at the City's site during the configuration and programming program on a periodic basis as needed but at least twice during the project. The purpose of the meetings is to solicit input from and coordinate activities with City personnel and the Engineer. The Contractor will provide samples of

PLC programs and present an update of current activities, a forecast of future activities, and discuss any problem areas.

c. Use diagrams in ladder rung format for the PLC program documentation system. Show all input devices near the left "power rail" and all outputs near the right "power rail." The diagrams will show all device codes and functional descriptions shown on the Drawings and will also show PLC reference codes and I/O assembly codes, module numbers, and terminal numbers. Provide source code for all operator interface programming, amply annotated to explain the operation. Include I/O tag numbers in rung or device annotations. Use control strategy numbers to identify PLC program sections. Alternative programming techniques may be used if approved in writing by the City.

d. Organize and structure all PLC programs to aid in software maintenance and modification. Organize each PLC program into a three-level "outline" structure consisting of strategies, equipment items (or sub-strategies), and "functions." Each PLC strategy consists of the logic required by one strategy in the Process Control Narratives. Each PLC equipment item (or sub-strategy) will consist of the logic associated with one piece of mechanical equipment (or associated with a logical subsection of a strategy). "Functions" will be the smallest subdivision of programs and will consist of functions, subroutines, or short algorithms requiring roughly five to ten rungs of ladder logic. Ladder logic will be used for all PLC programming unless otherwise approved in writing by the City.

e. PLC programming will be thoroughly documented. Each contact, coil, timer, function block, or other rung item will be annotated in the program listing with: the internal item number (i.e., coil number, contact number, etc.); the external tags (where applicable); and a brief description of the item's function. External tags will be the input or output tag number from the PLC I/O schedule or, for points created in a PLC and transmitted to (or from) the central computer system, the tag number used in the central computer.

8. Provide a dial-up telephone line for use by the automatic alarm dialer. Provide a wall mounted telephone using the same dial-up line for operator convenience.

F. Standby Generator

1. Provide permanently installed, natural gas fueled Kohler or approved equal generator with automatic transfer switch, manual transfer switch, and load bank connection. Provide Crouse Hinds E0400-1686 Posi-lok load bank receptacles

to test generator for output and generator break in. The design Engineer must verify gas pressure with P.G.& E. and fuel demand with generator manufacturer prior to review of submittal. The engine manufacturer must certify that the engine is designed to operate on natural gas and propane. Generator will be shipped from the factory with City approved color. See attached single-line diagram for wiring.

2. Submit generator sizing calculations for City approval. Sizing calculations will assume loading based on lead pump running, lag pump starting and full operation of all electrical equipment at the site. Generator will run at 100% of name plate current for 4 hours on primary fuel supply using City owned load bank.

3. Provide automatic back-up propane fuel capability and 24 hour supply of fuel. Propane tank to be factory-painted with City approved color.

4. Obtain Fire Department approval for site of back-up fuel tank.

5. Provide instrumentation:

   a) Generator voltage, frequency, and amp meters.

   b) Oil pressure gauge.

   c) Battery volt meter.

   d) Temperature gauge.

   e) Hour meter.

   f) External battery with trickle charge.

   g) Dry contacts for telemetry - showing generator running.

6. Provide automatic shut-off and alarms:

   a) Low engine oil pressure.

   b) High engine temperature.

   c) Over speed.

   d) Over crank.

7. Locate exhaust away from dry well ventilation and provide stainless steel rain cap. Insulate exhaust stack from generator enclosure or roofing material.

8. Provide sound attenuation as necessary to meet or exceed City noise standards for location. Attenuation may include silencers, insulation and/or enclosure. Provide ambient noise measurements and calculations demonstrating compliance.

G. Gas Monitoring System

1. Provide a permanent gas monitoring system in the dry well.

2. Monitoring system will monitor for lack of oxygen, lower explosives limit, and hydrogen sulfide.

3. The monitoring system will be tied to the telemetry system alarms.

4. Manufacturer will be MSA or an approved equal.

H. Details Required on Improvement Plans:

1. Site Plan: Locations of power pole, transfer switch, emergency generator, emergency fuel supply, control panel, wet well, dry well, ground slab, driveway, fencing, water service, emergency suction/discharge boxes. Provide site grading and drainage details .

2. Wet well: Influent piping (standard inside drop manhole); suction piping (min. 6" off bottom of manhole); emergency suction line; bubbler line including connection hardware; water/alarm levels (pump on, pump off, low level, high level), redundant high water float switch.

3. Dry well: Pumps and piping; safety ladder, ladder light.

4. Emergency Power: Electrical details specified to include size and material of conduit, switch gear, telemetry compatibility. Electrical details will include power source, meter location, cabinetry. Wiring diagrams will depict connection to and between PG&E, transfer switch, emergency generator and dry well as shown in the attached single-line diagram.

5. Force main discharge details.

I. Record Drawings and Manuals:

1. Provide three (3) copies of record drawings and an electronic copy in AutoCAD latest version.

2. Provide three (3) copies of O&M Manuals plus an electronic copy when available.

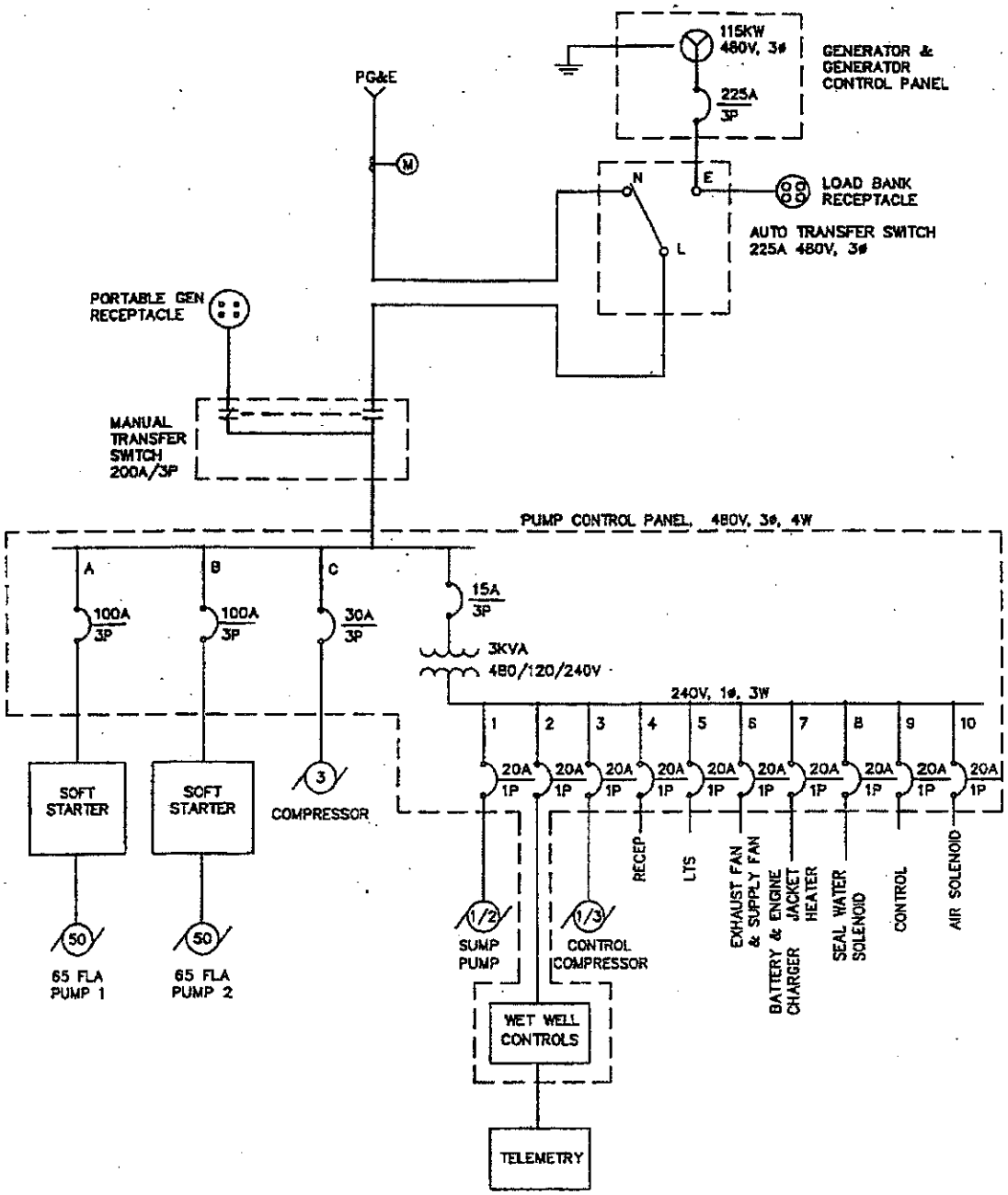

EXAMPLE SINGLE-LINE DIAGRAM

NOT TO SCALE

Appendix "D"

SEWAGE PEAK LOAD FACTOR VS. POPULATION
SEWAGE DESIGN FLOW CONTRIBUTION

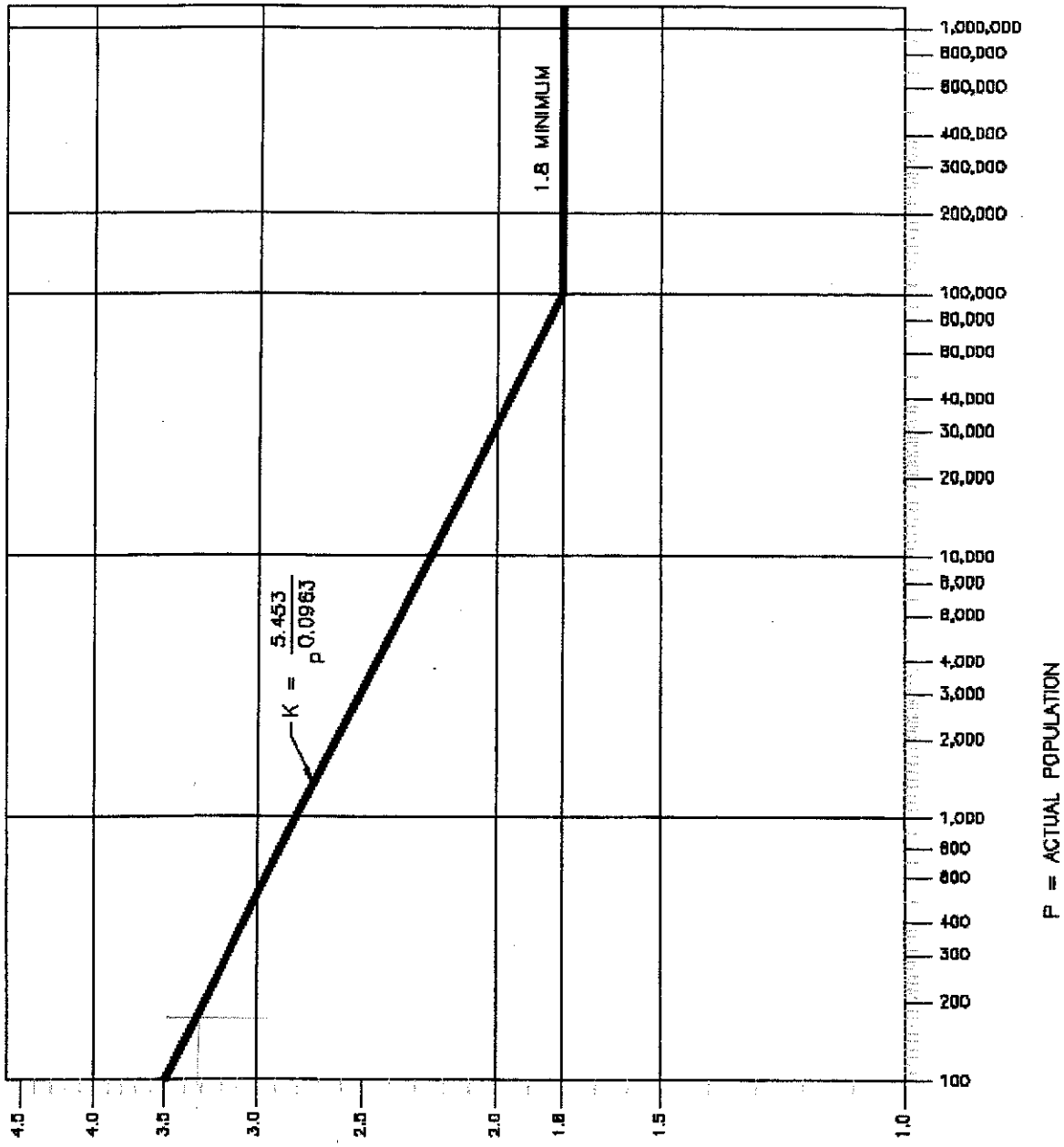

K = RATIO OF PEAK TO AVERAGE SEWAGE FLOW RATE = (PEAK LOAD FACTOR)

SEWAGE PEAK LOAD
FACTOR vs POPULATION

Zoning Area Type	Units per Acre	People per Unit	People per Acre	Description
R–1 R–1–9	4 (8.5 max)	3.25	13	Single Family Residential District
R–1–6 R–1–7.5	6 (7 max)	3.25	19.5	Single Family Residential District
R–2	8 (14 max)	3.25	26	Two Family Residential District
R–3	25 (29 max)	**	55 to 81	Multiple Family Residential
R–3–10	8 (10 max)	**	19 to 26	
R–3–15 R–2	12 (15 max)	**	29 to 39	
R–3–20	16 (20 max)	**	38 to 52	
R–3–30	25 (30 max)	**	57 to 81	
R–3–40	30 (43 max)	**	82 to 98	
R–4	30 (43 max)	**	82 to 98	Residential, Professional, Apartments Office District
R–5	75 (110 max)	**	209 to 243	High Rise
R–R	–	–	16	Rural Residential
Hills	2 (3 max)	3.25	6.5	Hilly Areas–Residential
Mobile Home	9	2.5	22.5	Mobile Homes or Trailer Parks
Schools	–	Attendance	–	20 Gallons Per Person Per 24 Hours
Eating Establishments	–	Seating Capacity	–	40 Gallons Per Person Per 24 Hours
C–1	8	2	16	Commercial Stores
U	–	–	16	Unclassified
A	–	–	16	Agriculture
M–1	–	–	16	Light Industrial

**Apartments:
Studio and one bedroom 1.9
Two or more bedrooms 2.25

**Condominium:
Studio and one bedroom 2.25
Two or more bedrooms 3.25

NOTE: The estimated densities shown above represent an average contribution rate, and must be increased in some situations.

SEWER CONTRIBUTION ACCORDING TO ZONING AND USE

U:\Eng\standards\sewerdesignstds9-2002.wpd

2. SANITARY SEWER STANDARD DRAWINGS

Std. #	Title	Approved
500	Standard Precast Concrete Manhole For Sanitary Sewer	Sept. 2002
502	Shallow Manholes and Junction Structures for Multiple Laterals	Sept. 2002
503	Inside Drop Manhole	Sept. 2002
504	Outside Drop Manhole	Sept. 2002
505	Rodding Inlet	Sept. 2002
506	Temporary Mainline Cleanout	Sept. 2002
506A	DELETED	
506B	DELETED	
507	Abandoned Pipe Plug	Sept. 2002
508	Abandoned Manhole	Sept. 2002
509	MOVED TO DESIGN STANDARDS	
510	MOVED TO DESIGN STANDARDS	
511	DELETED	
512	Manhole Frame & Cover	Sept. 2002
513	4" & 6" Sewer Service Lateral and Cleanout	Sept. 2002
515	Discharge For Private Force Main	Sept. 2002
516	Sewer - Water Main Crossing Details	Sept. 2002
517	Miscellaneous Pipe Installation Details	Sept. 2002
518	PVC Sewer Pipe Deflection Mandrel	Sept. 2002
519	Two Stage Grease Interceptor	Sept. 2002
520	Three Stage Sand & Grease Interceptor	Sept. 2002
521	Sampling Manhole Exterior Use	Sept. 2002
522	Sampling Box Building Interior	Sept. 2002
523	Three Stage Grease Interceptor	Sept. 2002
524	Control Sampling Manhole	Sept. 2002
525	Recreational Vehicle Disposal Facility	Sept. 2002
526	Food Facility Enclosure	Sept. 2002

U:\Eng\STANDARDS\sewerstandarddwgindex9-2002.wpd

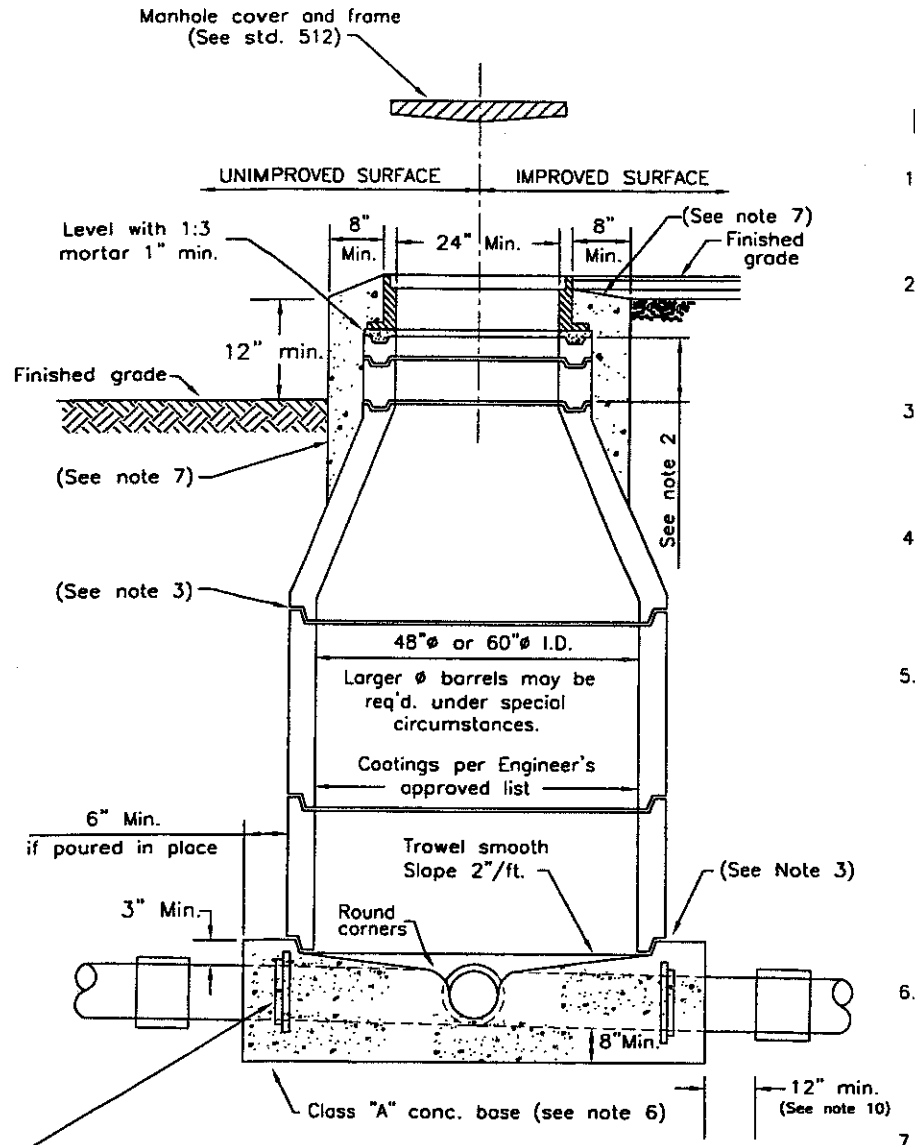

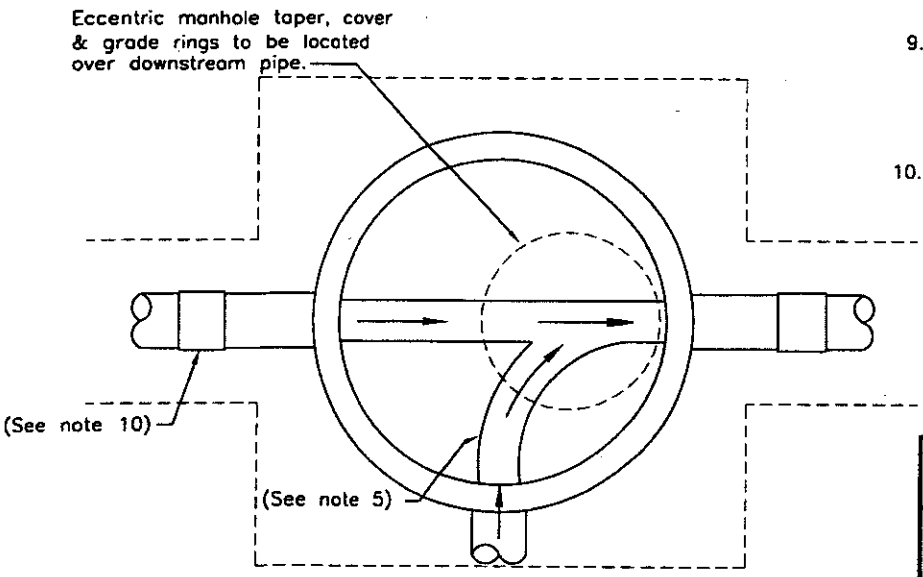

MANHOLE BASE

CHANNELIZATION PLAN AND LOCATION OF ECCENTRIC MANHOLE COVER

NOTES:

1. When manholes are installed in un-improved areas, the top of the cover shall be a min. of 1 foot above grade.
2. Min. of one 3" grade adjustment ring. Max. height of grade adjustment rings = 20". Alternately, contractor may cast grade adjustment rings in place.
3. Set all barrel sections & taper sections in plastic gasket, Ram-nek or approved alternate. Typical joint use (1) 3/4"x 2-1/2" Ram-nek seal, (2 seals in high water table areas).
4. Cone section (taper) must be concentric for 48"ø manhole or eccentric for 60"ø manhole unless otherwise specified and approved by the Director of Utilities.
5. After lower ring section is set, break out top half of pipe flush with inside face of M.H. wall and construct shelf and u-shaped channel. Make elevation changes gradually and directional changes with smooth curves. Slope and size of channels shall match upstream and downstream pipes. Manhole channels with a horizontal change in direction of 30° or more shall have a minimum drop of 0.1' across the manhole or shall match the slope of the pipe, whichever is greater.
6. Poured-in-place base shall be poured full thickness on undisturbed soil. Precast base to be from City Engineer's approved list and placed on 6" minimum of 3/4" drain rock installed against undisturbed earth.
7. Class "A" conc. collar shall be 2" below finished grade.
8. Standard manhole barrel section per ASTM C478.
9. 48"ø I.D. M.H. to be used for sewer mains less than 18"ø. 60"ø I.D. M.H. to be used for all trunk and collector sewers 18"ø to 48"ø or where drop fittings are used.
10. Flexible pipe coupling is required on all pipe other than SDR 35 PVC pipe. Flex coupling to be installed in mainline trench and out of manhole excavation.

CITY OF SANTA ROSA		
STANDARD PRECAST CONCRETE MANHOLE for SANITARY SEWER		
SCALE: NONE	DATE: Sept.2002	
DWN: GC CHK: RH	APPROVED	FILE NO. STD.- 500

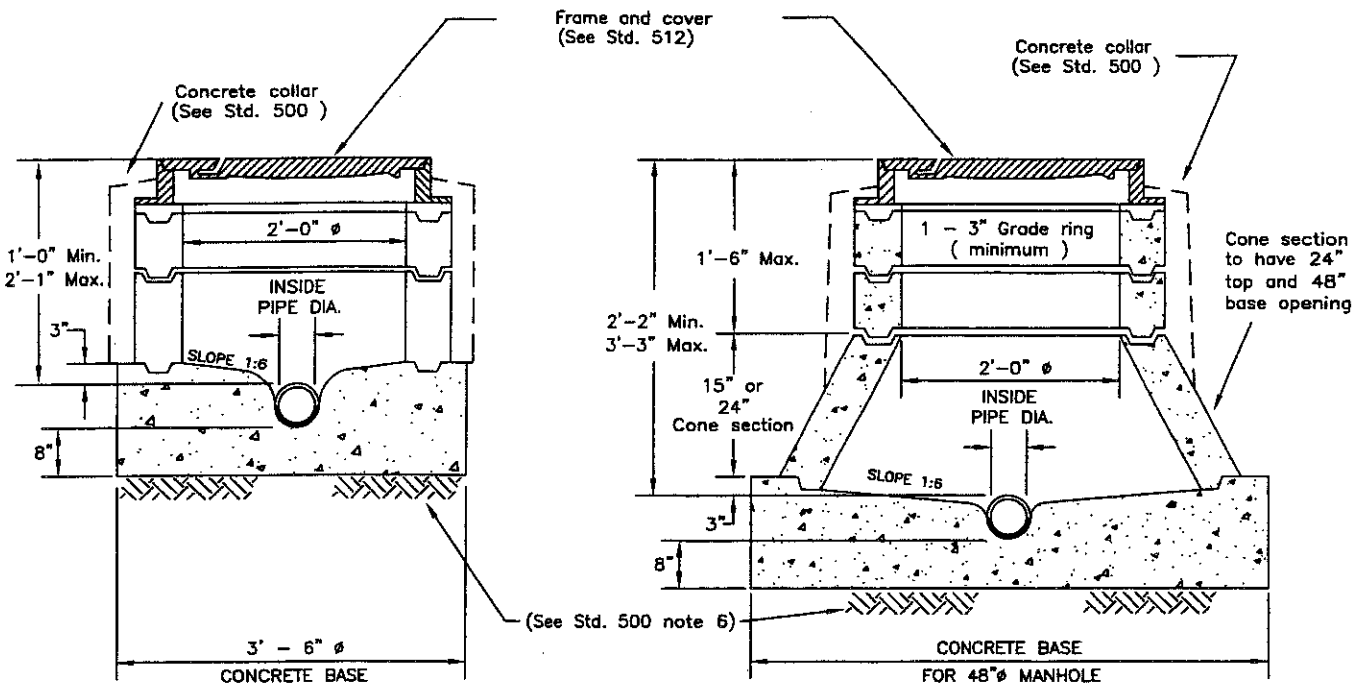

TYPE "A" MANHOLE

TYPE "B" MANHOLE

SHALLOW MANHOLE DETAILS

NOTE – See Std. 500 for typical construction details

NOTE – Type "A" Manhole to be installed only where specifically approved by the Director of Utilities.

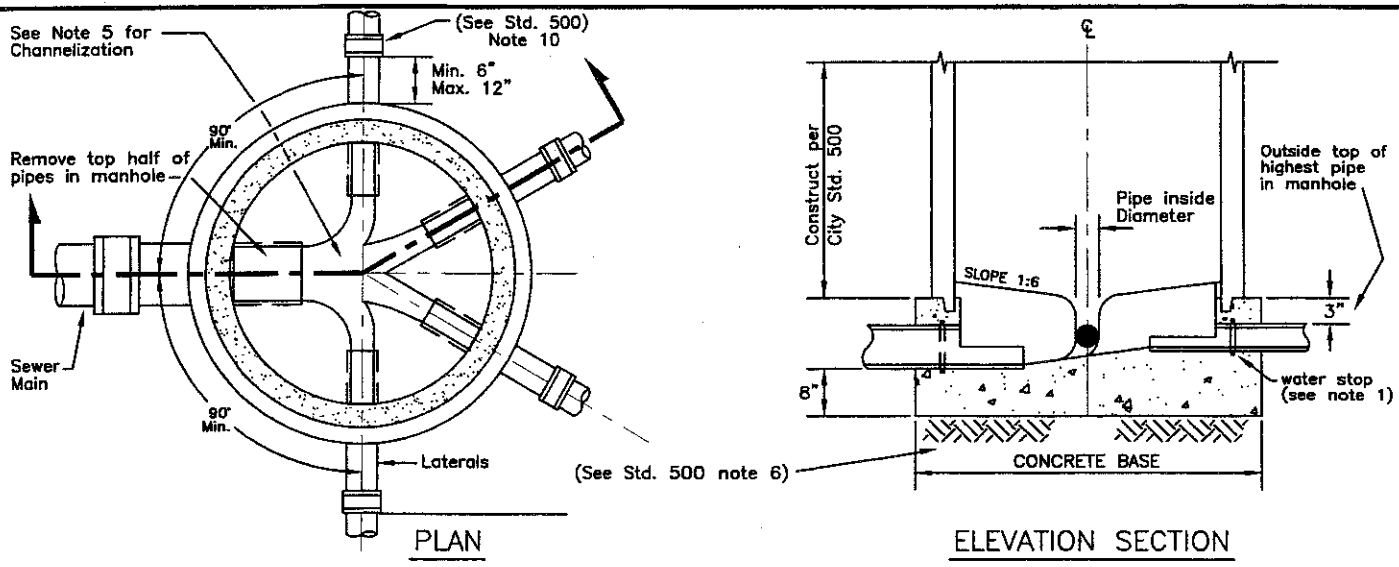

PLAN

ELEVATION SECTION

JUNCTION STRUCTURE FOR MULTIPLE LATERALS

NOTES:

1. An approved water stop shall be installed on all pipe entering or leaving a manhole and centered under manhole wall as shown.
2. Generally, the elevations of the top of all pipes entering the manhole base block shall be the same.
3. The maximum number of laterals to be connected to a manhole is (4) four.
4. See Std. 500 for manhole construction details.
5. The channels shall be formed to provide smooth flow through the manhole to the satisfaction of the City Engineer.
6. Channels and laterals through the exterior of the base shall be constructed radially.

CITY OF SANTA ROSA		
SHALLOW MANHOLES JUNCTION STRUCTURES FOR MULTIPLE LATERALS		
SCALE: NONE	DATE: Sept.2002	
DWN: GC CHK: RH	APPROVED	FILE NO. STD.-502

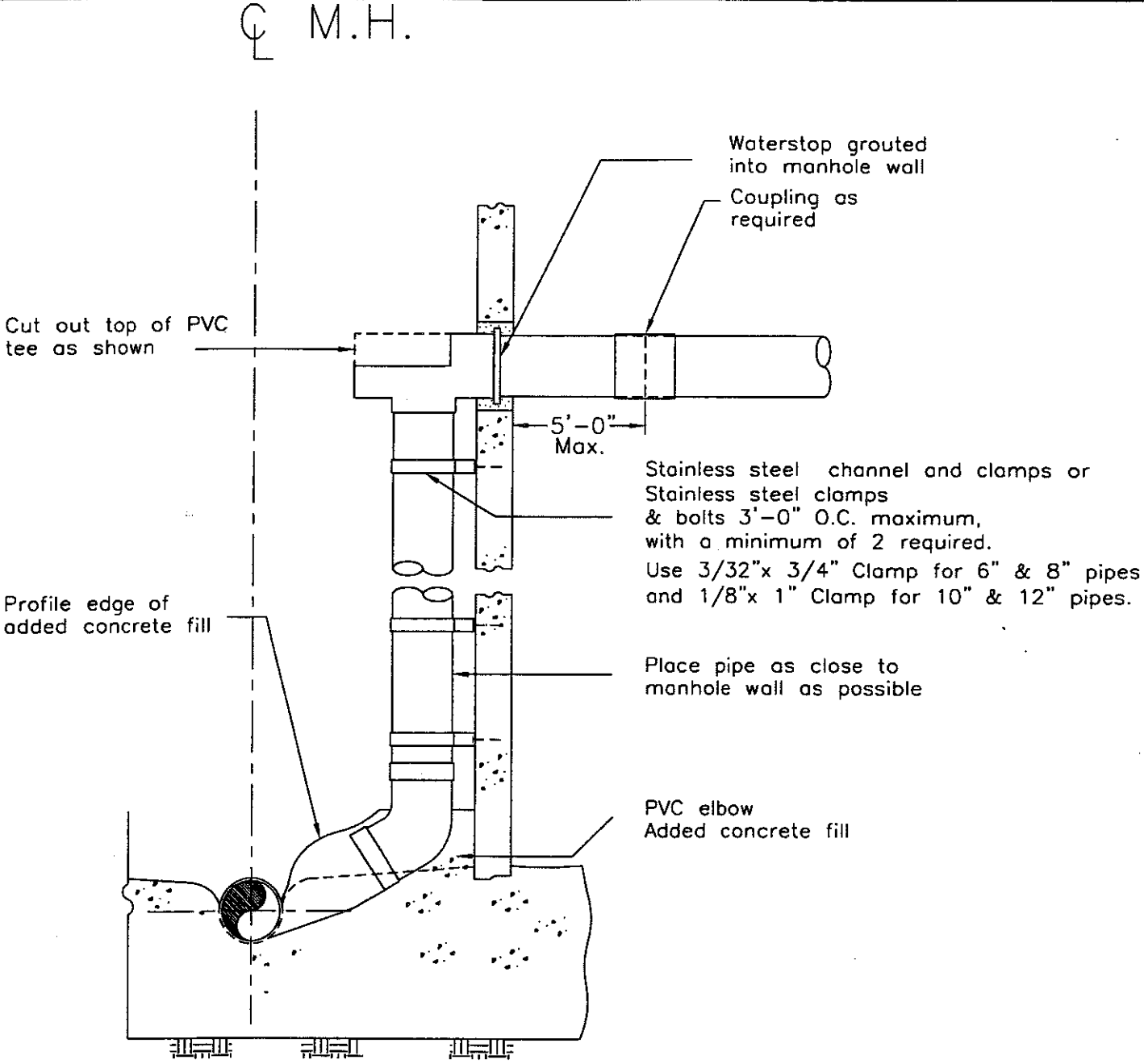

NOTES:

1. Manholes constructed using this standard shall be 60" in diameter and installed in conformance with Standard 500. Use 72" MH where there are two drop connections.

2. Enclose elbow in concrete: Form smooth channel with sweep to manhole flowline.

3. Install waterstop in accordance with manufacturer's instructions as shown.

4. PVC pipe and fittings shall have same nominal size and SDR rating as incoming pipes.

CITY OF SANTA ROSA		
INSIDE DROP MANHOLE		
SCALE: NONE	DATE: Sept.2002	
DWN: RH CHK: G.C.	APPROVED	FILE NO. STD.- 503

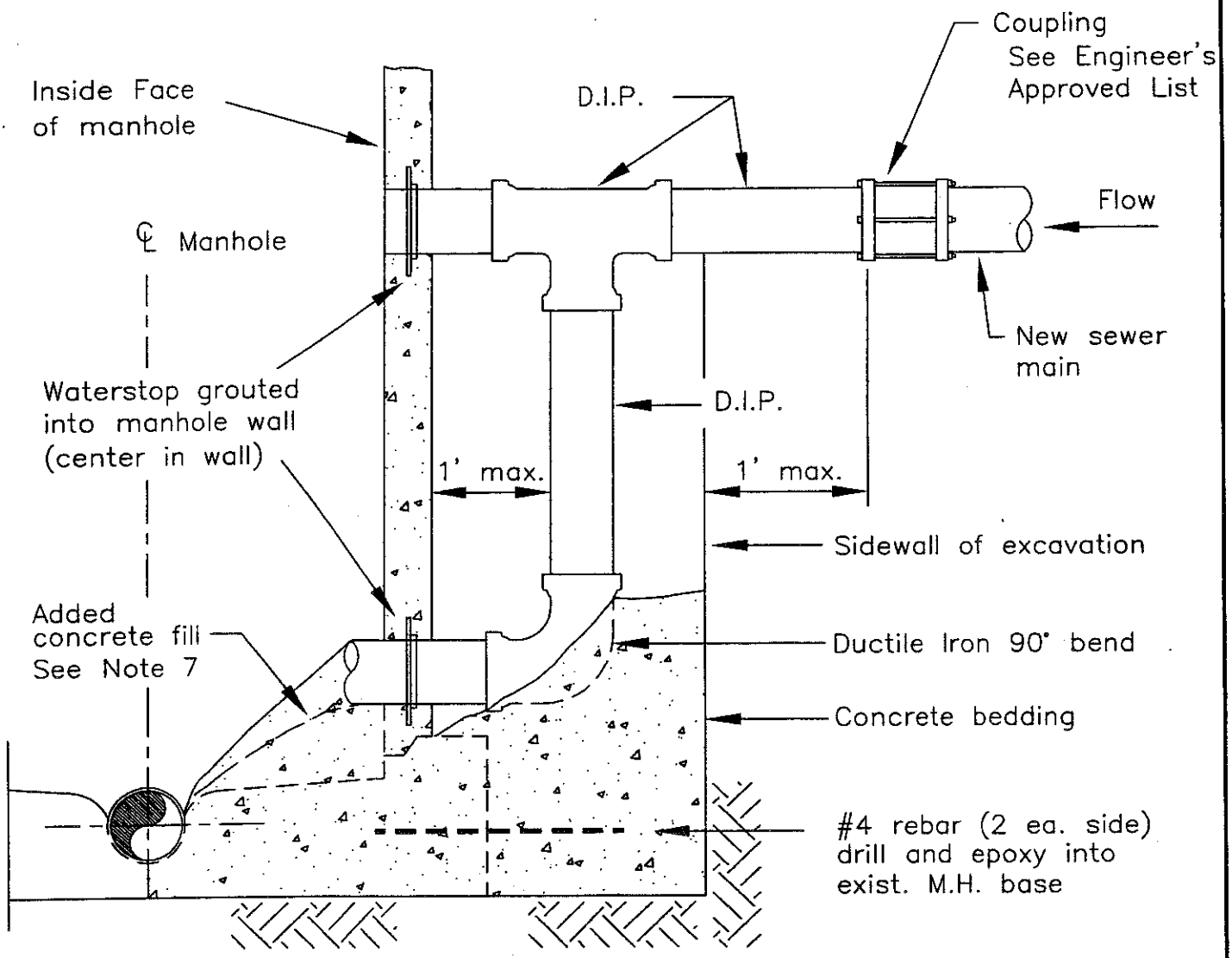

NOTES

1. Ductile iron pipe shall be pressure class 350 per AWWA C151.
2. Pipe and fittings shall be furnished with push – on or mechanical joints. Fittings shall conform to ANSI/AWWA C110/C153.
3. To be installed only where specifically approved by the Director of Utilities.
4. Drop inlet pipe and fittings shall be the same size as the incoming sewer main.
5. See Standard 503 for standard inside drop installation.
6. Install waterstop in accordance with manufacturer's instructions as shown.
7. Form smooth channel with sweep to manhole flowline.

CITY OF SANTA ROSA		
OUTSIDE DROP MANHOLE		
SCALE: NONE	DATE: Sept.2002	
DWN: GC CHK: RH	APPROVED	FILE NO. STD.– 504

APPROVED FRAME & COVER

See Engineer's Approved List

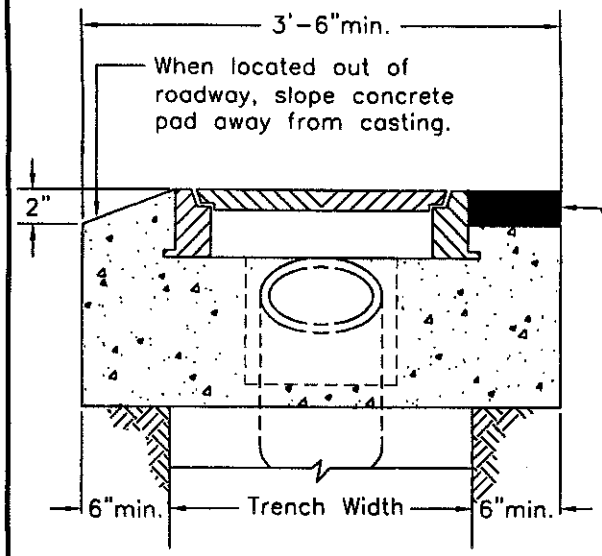

SECTION A-A

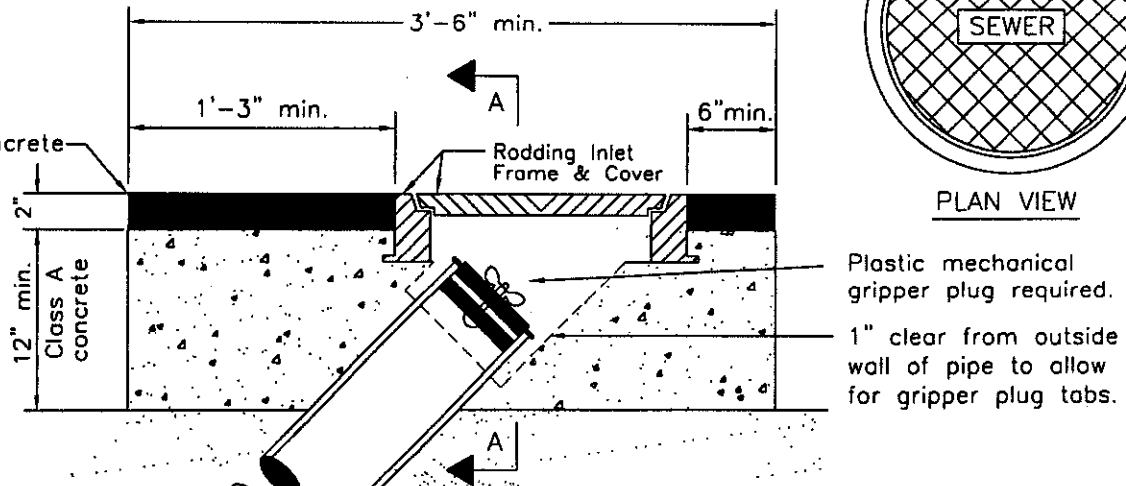

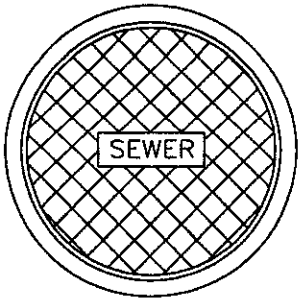

PLAN VIEW

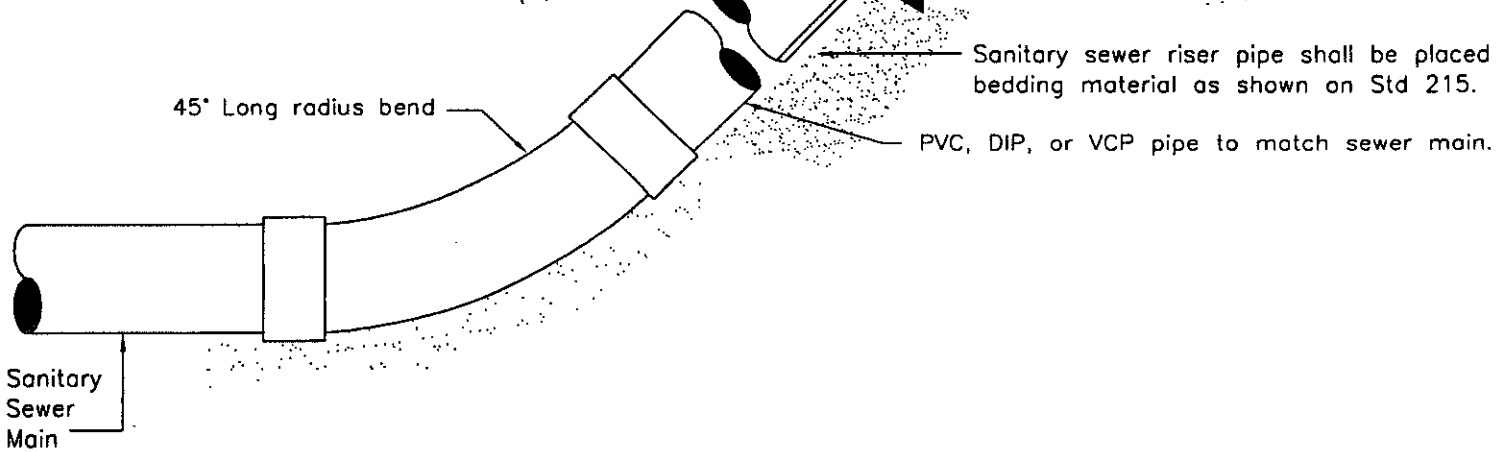

Note: To be used for main sizes 10" or less and where sewer main will not be extended.

CITY OF SANTA ROSA

RODDING INLET

SCALE: NONE | DATE: Sept.2002

DWN: GC CHK: RH | APPROVED: | FILE NO. STD.- 505

APPROVED BOX & COVER

See Engineer's Approved List.

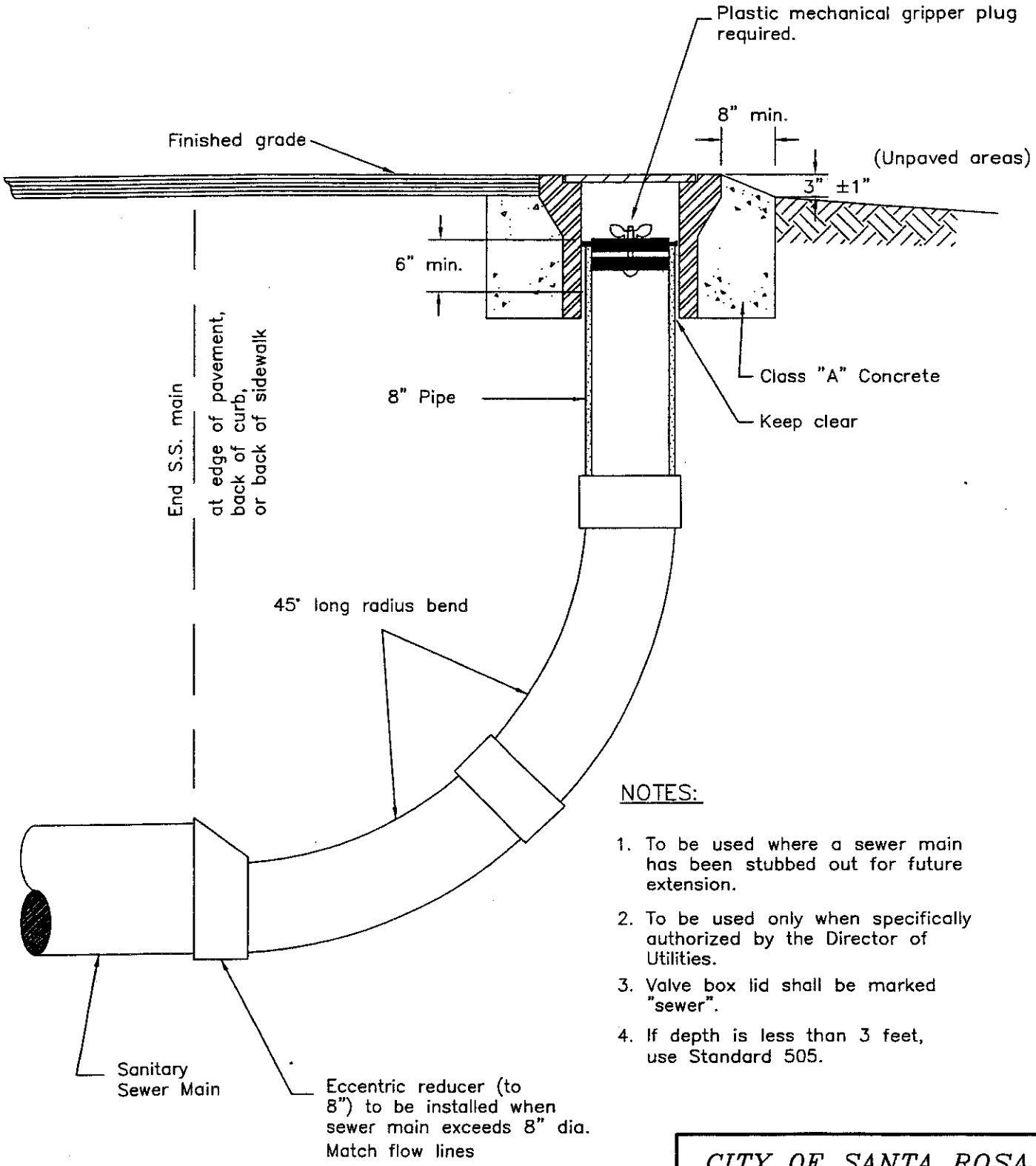

NOTES:

1. To be used where a sewer main has been stubbed out for future extension.
2. To be used only when specifically authorized by the Director of Utilities.
3. Valve box lid shall be marked "sewer".
4. If depth is less than 3 feet, use Standard 505.

CITY OF SANTA ROSA	
TEMPORARY MAINLINE CLEANOUT	
SCALE: NONE	DATE: Sept.2002
DWN: GC CHK: RH	APPROVED: FILE NO. STD.- 506

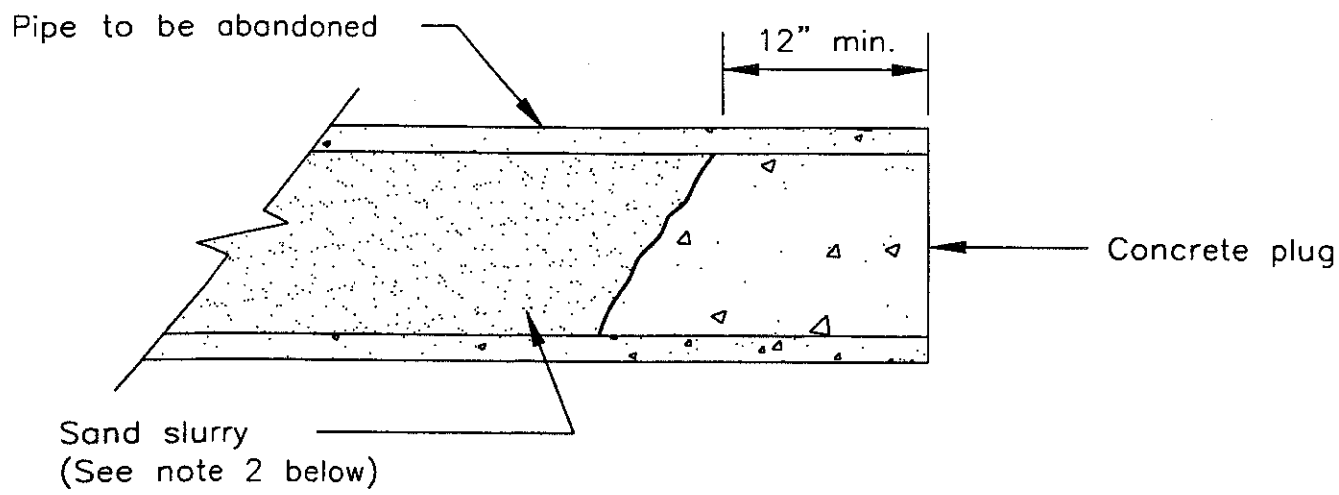

12" DIAMETER PIPE AND LARGER

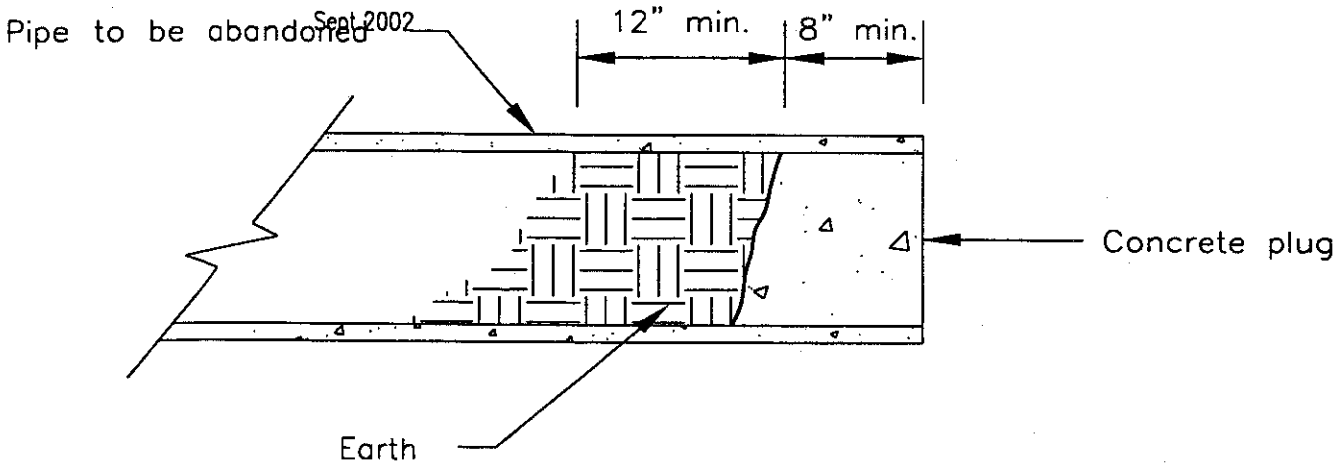

10" DIAMETER PIPE AND SMALLER

NOTES:

1. Pipe plugs shall be installed to the satisfaction of the Director of Utilities.

2. Abandoned pipes, 12" and larger, shall be broken into every 50' and shall be filled completely with sand slurry.

CITY OF SANTA ROSA		
ABANDONED PIPE PLUG		
SCALE: NONE	DATE: Sept.2002	
DWN: GC CHK: RH	APPROVED	FILE NO. STD.-507

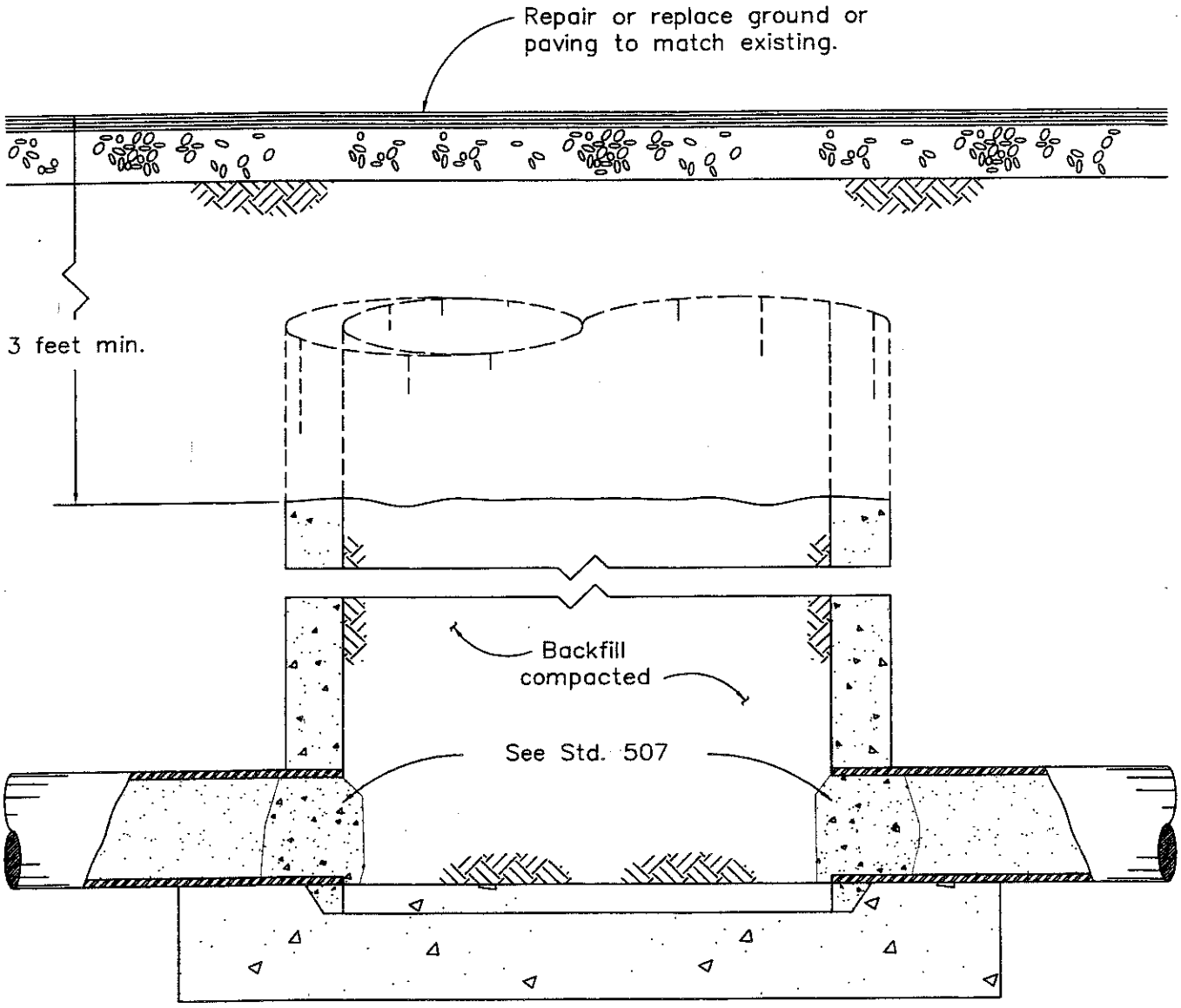

NOTES:

1. Remove frame, cover, taper and barrel sections as required to a minimum of 3' below finished grade.
2. After plugging all pipes in manhole, the remaining portion of the barrel section and all voids created by the removal off the upper portions of the manhole, shall be backfilled and compacted to 90% relative density. Use trench backfill or pipe bedding material per Std. 215.

CITY OF SANTA ROSA	
ABANDONED MANHOLE	
SCALE: NONE	DATE: Sept.2002
DWN: AH CHK: RH	APPROVED FILE NO. STD.- 508

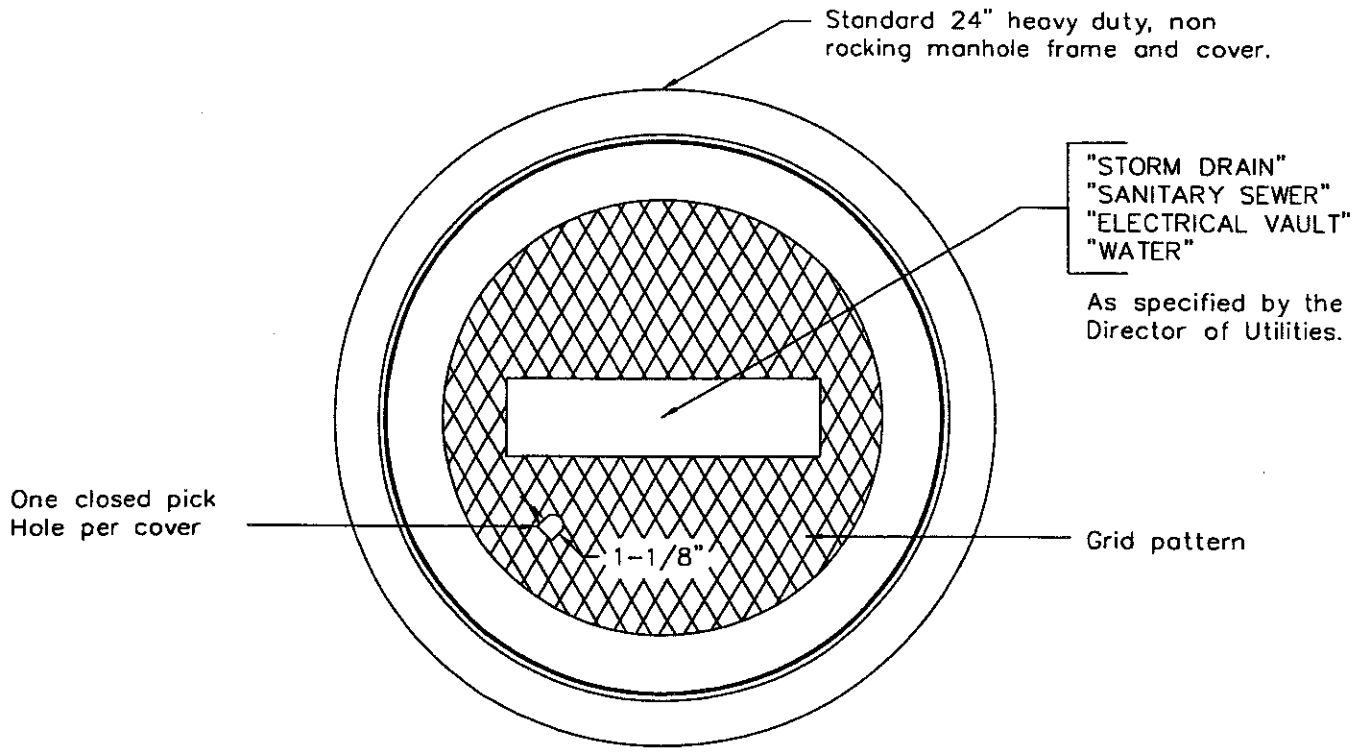

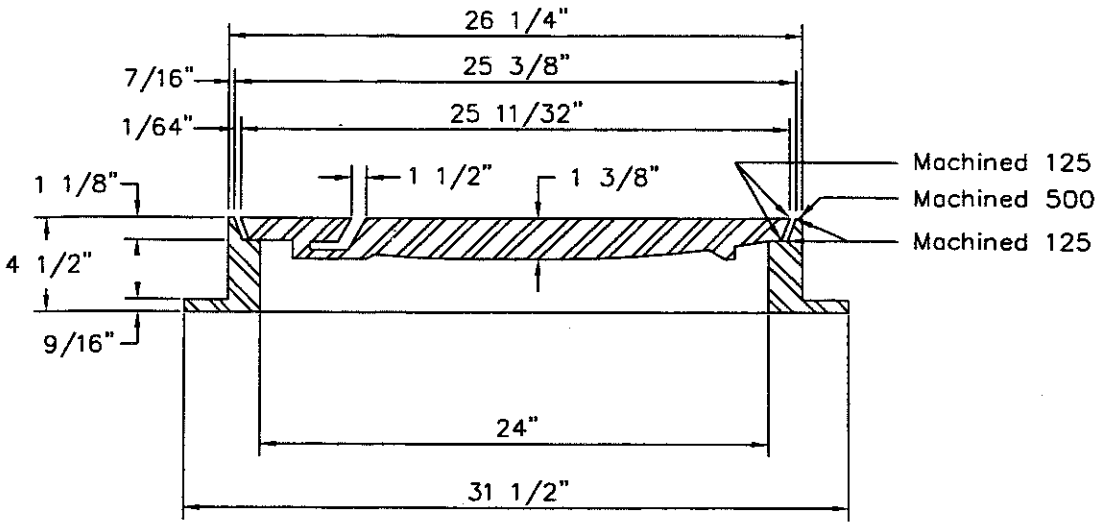

NOTES:

1. Specify sanitary sewer, storm drain, electrical vault, or water when ordering. All castings shall be dipped in approved ASPHALTUM or BITUMINOUS Paint.

2. All material used in manufacturing shall conform to A.S.T.M. designation A-48 Class 35 B, or of United States Government Specifications QQ1-652b.

3. Minimum weight components: Cover - 130 pounds
   Frame - 135 pounds

4. Bolt down covers are required on all sewer mains located in easements, on school grounds, through parks, and on any trunk sewers larger than 12" in diameter. Coat the bolt threads on the final bolt up with "never cease" or teflon based pipe dope.

APPROVED MANHOLE FRAME & COVER

See Engineer's Approved List

CITY OF SANTA ROSA		
MANHOLE FRAME and COVER		
SCALE: NONE	DATE: Sept.2002	
DWN: AW CHK: RH	APPROVED	FILE NO. STD.- 512

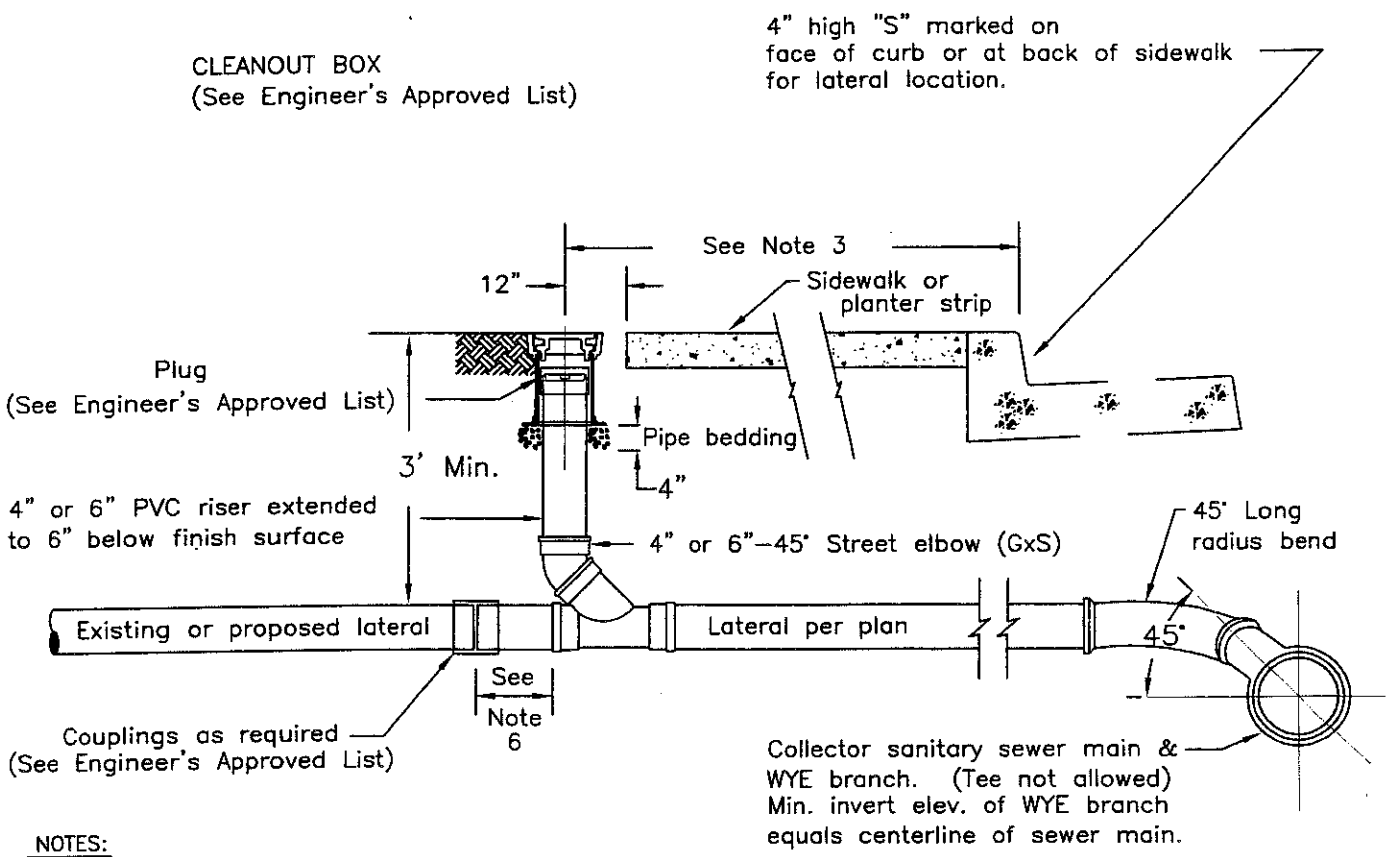

NOTES:

1. The sewer service lateral shall be of sufficient depth to adequately serve the building site, and in no case shall be less than 3 FT. deep at the cleanout unless otherwise authorized by the Director of Utilities.

2. Where problems are anticipated in providing sewer service to a given building site, the lateral invert at the cleanout shall be staked by the owner's engineer.

3. Cleanout must be installed within the Public Right of Way or P.U.E. Cleanout to be installed 18" from face of curb or 12" maximum behind sidewalk. Where service is in driveway, install cleanout 18" behind apron.

4. In cases where the cleanout installation conflicts with existing facilities, the contractor shall verify any alternate location with the Director of Utilities prior to installation.

5. Minimum 2% slope for 4" laterals and a min. 1% slope for 6" laterals are required unless a variance is specifically approved by the Director of Utilities and the Building Official.

6. A minimum of 12" when connecting to existing sewer lateral or extend to 1' behind P.U.E. or sidewalk for new construction.

7. For new construction, install cap or plug at end of service lateral.

8. Lateral material shall be PVC SDR 26 or SDR 35, Ductile Iron pipe.

9. Cleanout components shall be the same size as the lateral.

10. Tap fittings on mains smaller than 12" may only be used under the approval of the Director of Utilities.

LATERAL CONNECTIONS TO EXISTING MAINS:

Main Size & Material	Connection Type	Couplings
6–10" ACP, VCP	Cut in PVC wye w/12" spools each end	Rubber w/Steel shear bands
6–10" PVC	Cut in PVC wye w/12" spools each end	Rigid slip couplings
6–10" DIP	Cut in DIP wye w/12" spools each end	DIP couplings
12" and larger	Tap fitting see Engineer's approved list	NA

CITY OF SANTA ROSA

4" & 6" SEWER SERVICE LATERAL and CLEANOUT

SCALE: NONE | DATE: Sept.2002

DWN: GC | CHK: RH | APPROVED | FILE NO. STD.-513

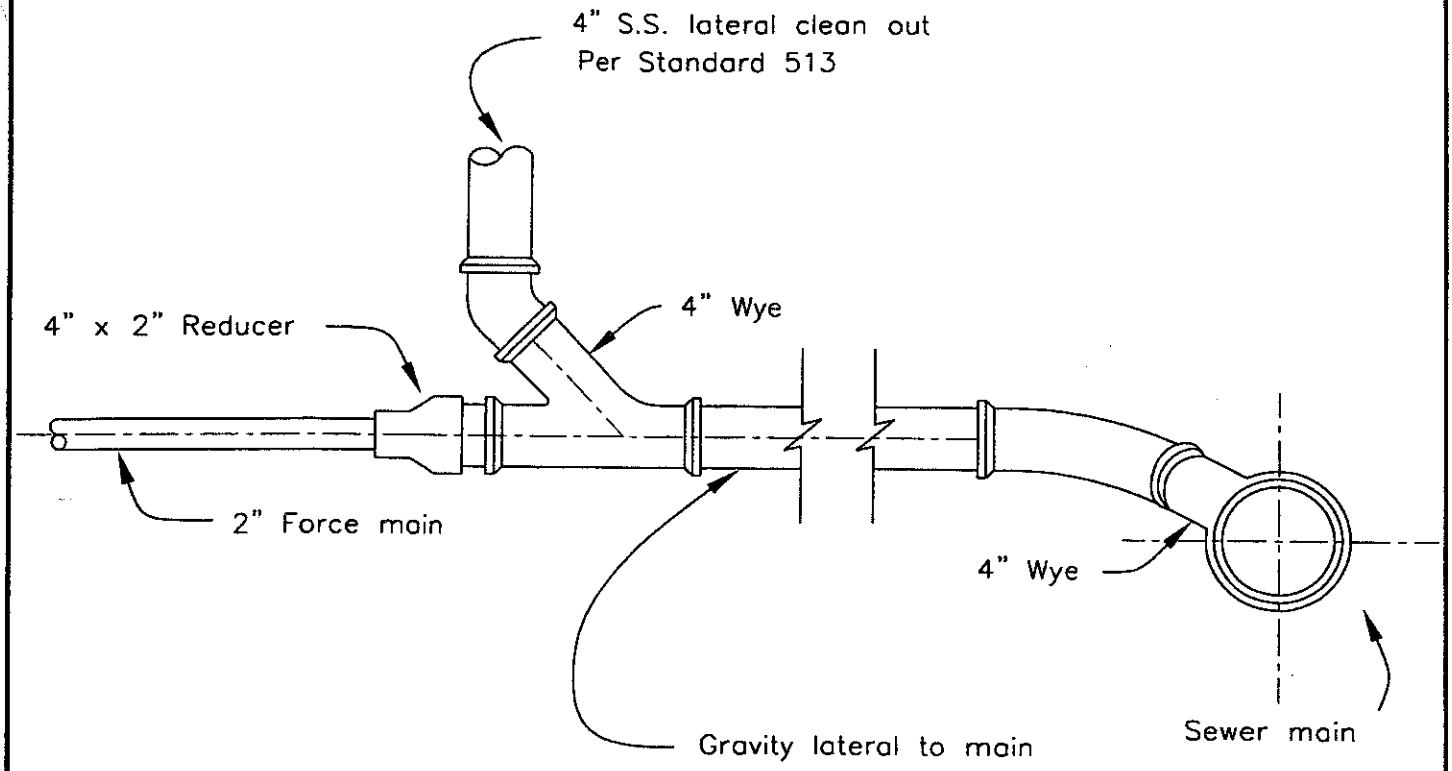

NOTES

1. Must be used for all private sewage lift station discharges. No discharges may be made directly to the collector sewer, trunk sewer, or manhole.

2. Any alternate design must be approved by the Director of Utilities.

3. Construction details, slope and materials conform to Std. #513.

CITY OF SANTA ROSA		
DISCHARGE for PRIVATE FORCE MAIN		
SCALE: NONE	DATE: Sept.2002	
DWN: GC CHK: RH	APPROVED	FILE NO. STD.- 515

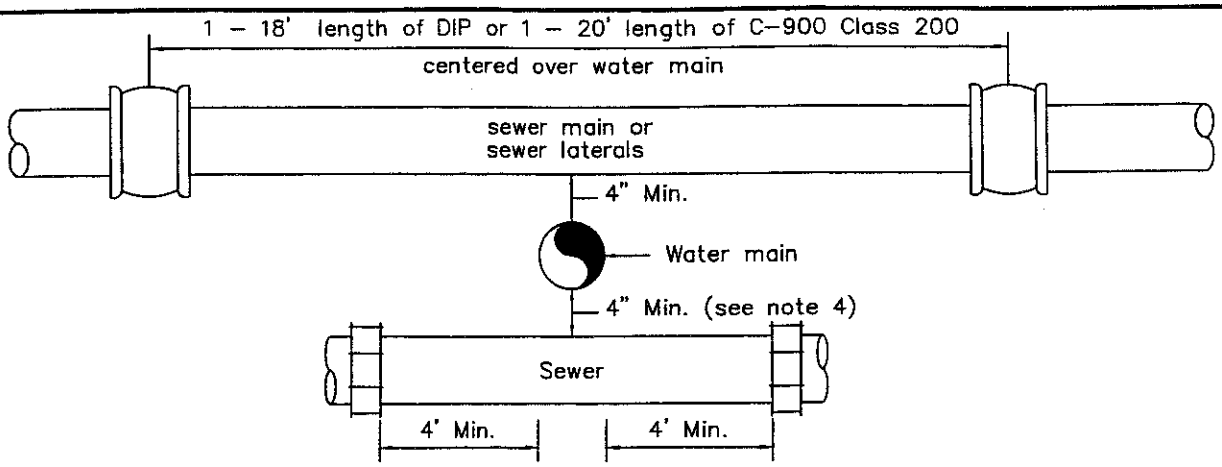

SEWER OVER OR UNDER WATER

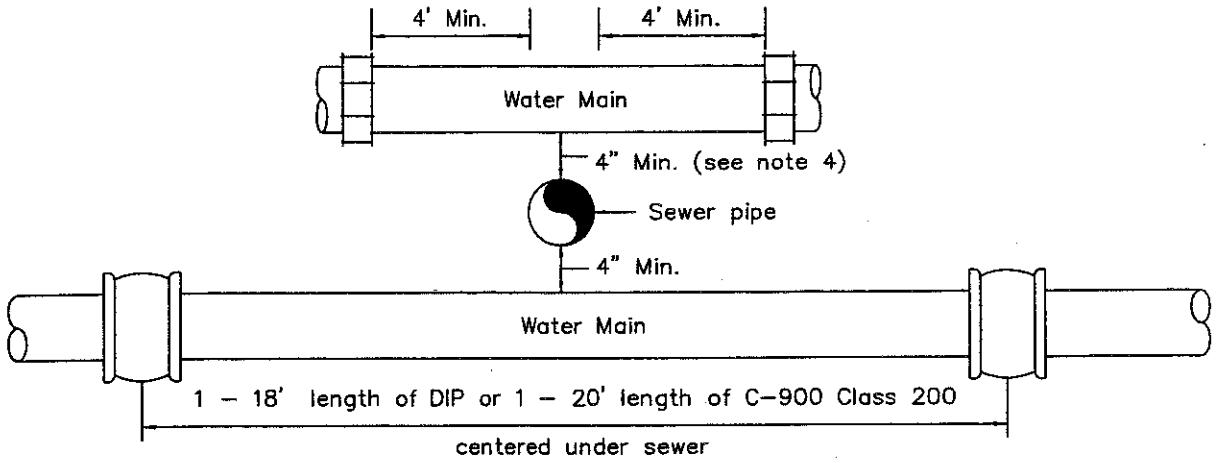

WATER OVER OR UNDER SEWER

NOTES:

1. All installations shall conform to the State of California Dept. of Health Services "Criteria For The Separation of Water Mains & Sanitary Sewers".
2. This Standard applies to pipes less than 24" in diameter. All crossings of larger diameter shall be as approved by the Director of Utilities.
3. All new Ductile Iron shall be wrapped in polyethylene per City of Santa Rosa Construction Specifications.
4. Per State Std.'s, a min. 4" clearance is required where sewer crosses below a water main. Where there is 1' or more vertical clearance, no special installation is required.
5. Any pipe / pipe crossings with less than 6" vertical clearance shall be padded with styrofoam, felt expansion joint material, or other expansive materials between pipes as approved by the Director of Utilities.

APPROVED COUPLINGS

See Engineer's Approved List

CITY OF SANTA ROSA	
SEWER–WATER MAIN CROSSING DETAILS	
SCALE: NONE	DATE: Sept.2002
DWN: CHK: RH	APPROVED
	FILE NO. STD.– 516

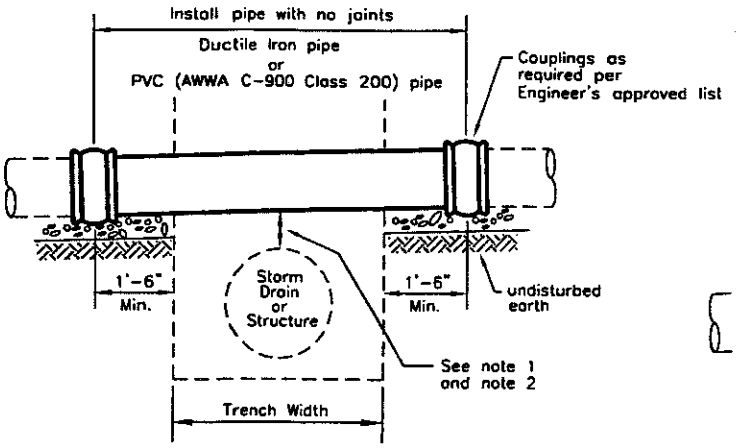

INSTALLATION OVER PIPE OR STRUCTURE

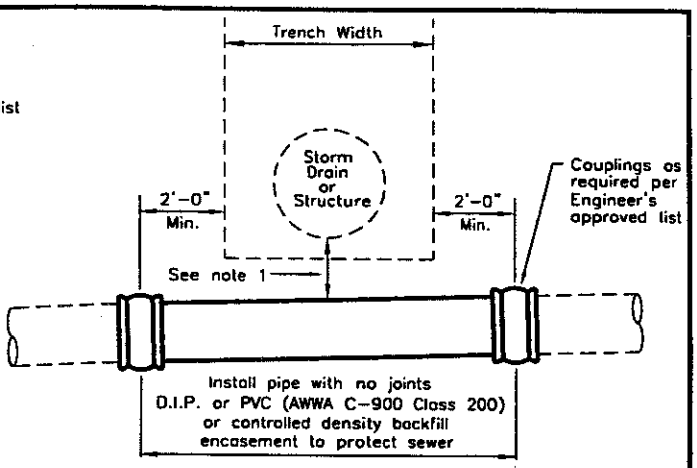

INSTALLATION UNDER PIPE OR STRUCTURE

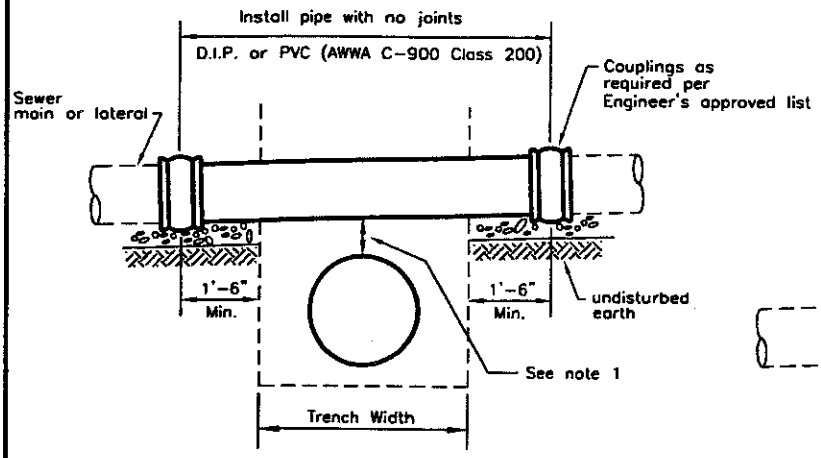

INSTALLATION OF PIPE OR STRUCTURE UNDER SANITARY SEWER

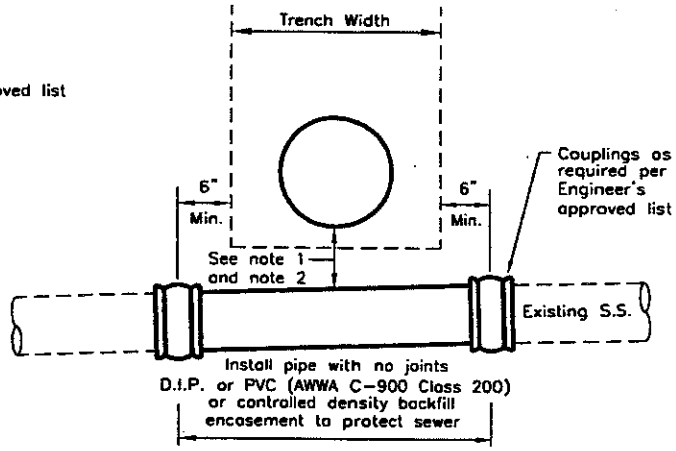

INSTALLATION OF PIPE OR STRUCTURE OVER SANITARY SEWER

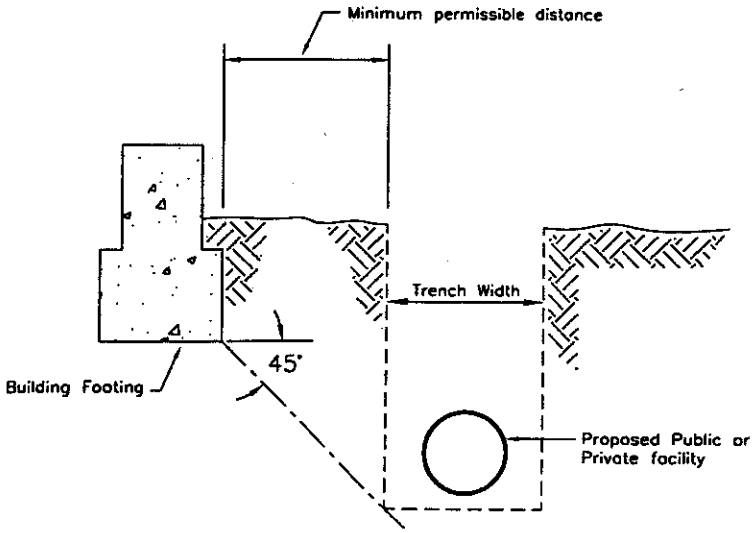

DETAIL OF BUILDING SETBACK FROM UNDERGROUND UTILITY

* NOTE: REQUIRED PER UNIFORM PLUMBING CODE SECTION 315.1

NOTES:

1. 1" minimum vertical clearance is required between pipes. Where clearance is less than 6", install felt expansion material or styrofoam between pipes.
2. This installation detail is required only if clearance is less than 1".
3. Ductile Iron pipe shall be encased in polyethylene film per City of Santa Rosa Construction Specifications.

CITY OF SANTA ROSA		
MISCELLANEOUS PIPE INSTALLATION DETAILS		
SCALE: NONE	DATE: Sept.2002	
DWN: GC CHK: RH	APPROVED: Robert Ward	FILE NO. STD.- 517

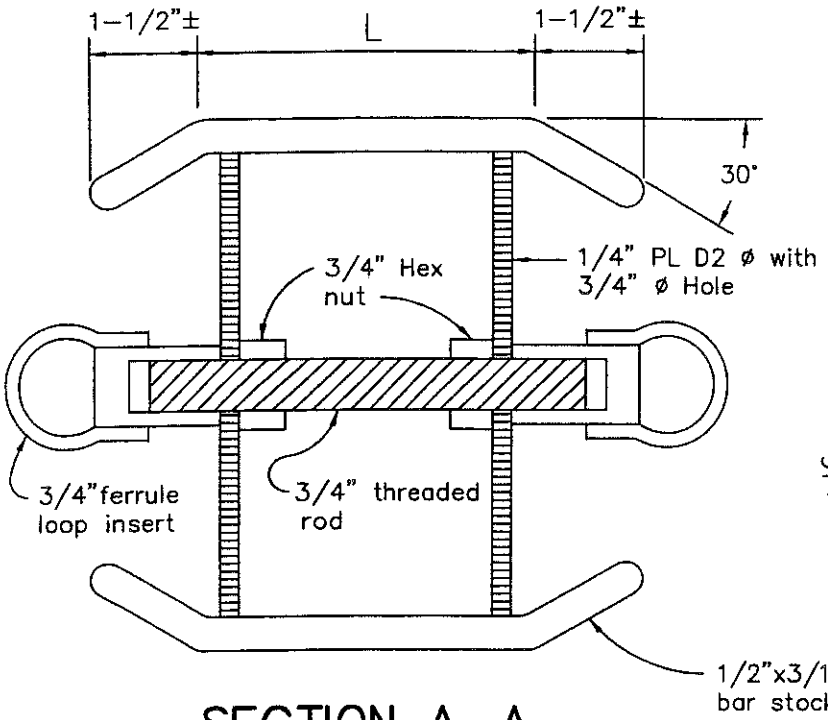

SECTION A-A

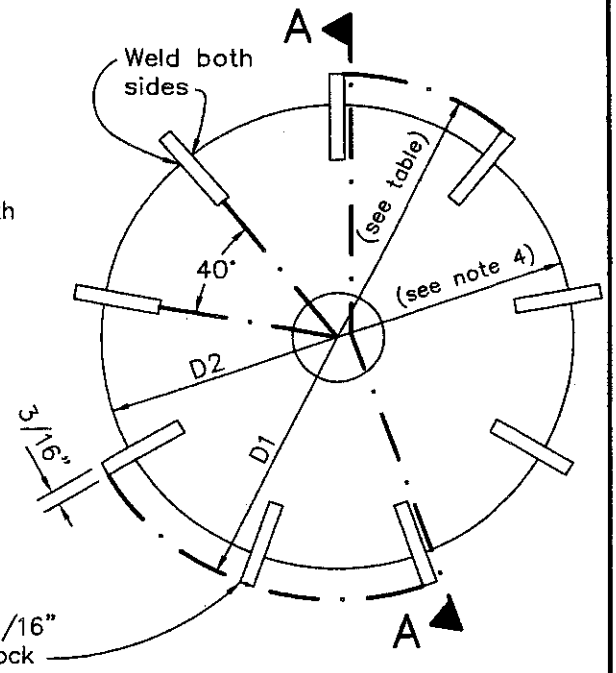

Nom. Pipe Dia.	L	MANDREL DIAMETER (D-1) SEE NOTE 3 5% DEFLECTION SDR 35	SDR 26
6	6"	5.619	5.503
8	8"	7.524	7.366
10	10"	9.405	9.207
12	12"	11.191	10.961
15	15"	13.849	13.559

NOTES:

1. Mark all materials with ASTM specification number, SDR number and deflection.

2. The 1/2" Bar Stock on edge provides clearance to pass small amounts of soil which may be in pipe.

3. Mandrel diameter has been calculated based on section 306-1.2.12 of the "Greenbook" Standard Specifications for Public Works Construction and or dimensions given in Table 1 of ASTM Standard D3034.

4. Plate diameter shall be 1" less than the mandrel diameter.

CITY OF SANTA ROSA	
PVC SEWER PIPE DEFLECTION MANDREL	
SCALE: NONE	DATE: Sept.2002
DWN: GC CHK: RH	APPROVED FILE NO. STD.- 518

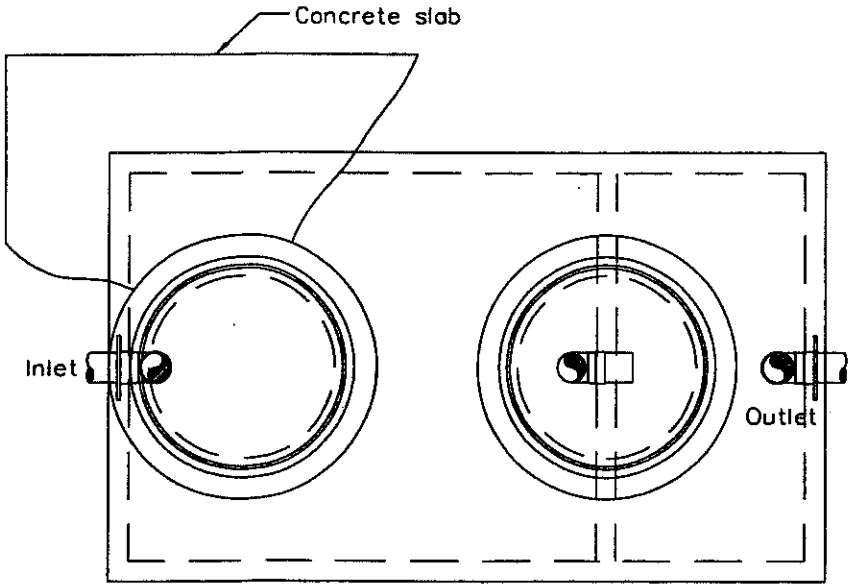

PLAN

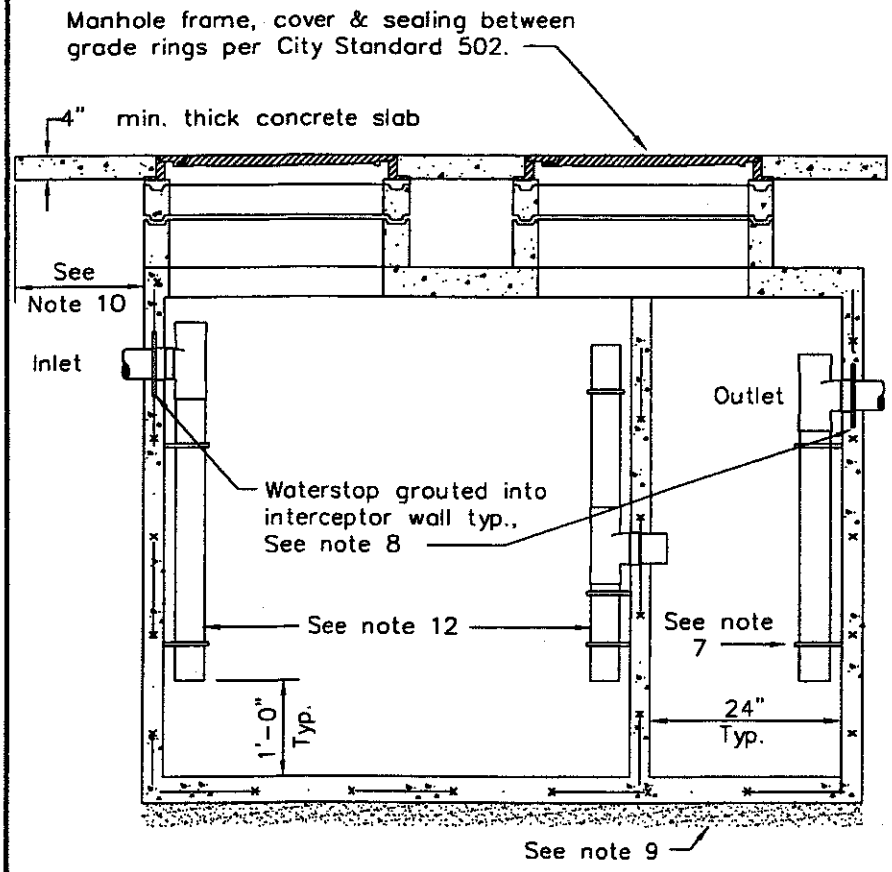

SECTION

Notes:

1. Pre manufactured tank shall be per Engineer's approved list.
2. All grease interceptors shall be located outside public right-of-way except with written approval of the Director of Public Works.
3. Grease interceptors shall be located outside of buildings in a location accessible to wastehauler pumper. Location subject to the approval of the Director of Utilities.
4. Tank capacity to be determined at the time of permit application.
5. Alternate design by a Registered Engineer may be substituted for review by the City.
6. Interceptor to be used in conjunction with "Sampling Manhole" per City Std. 521.
7. Stainless steel clamp and bolts 3'-0" o.c. max. (typ.) min. 2 req'd.
8. A waterstop consisting of a standard manhole adapter gasket as supplied by the pipe manufacturer shall be grouted into the interceptor wall near the center of the inlet and outlet walls.
9. Place 3" min. bedding material per City Standard 215.
10. Concrete slab to extend min. 24" beyond all sides of tank in traffic areas.
11. Install interceptor per manufacturer's specifications.
12. Pipe and fittings to be 4" schedule 40 PVC DWV.
13. All surface water must drain away from manholes.
14. All waste must enter through inlet fittings only.
15. Protective coating shall cover all internal surfaces and meet the criteria of ASTM-309.

CITY OF SANTA ROSA		
TWO STAGE GREASE INTERCEPTOR		
SCALE: NONE	DATE: Sept.2002	
DWN: GC CHK: RH	APPROVED	FILE NO. STD.- 519

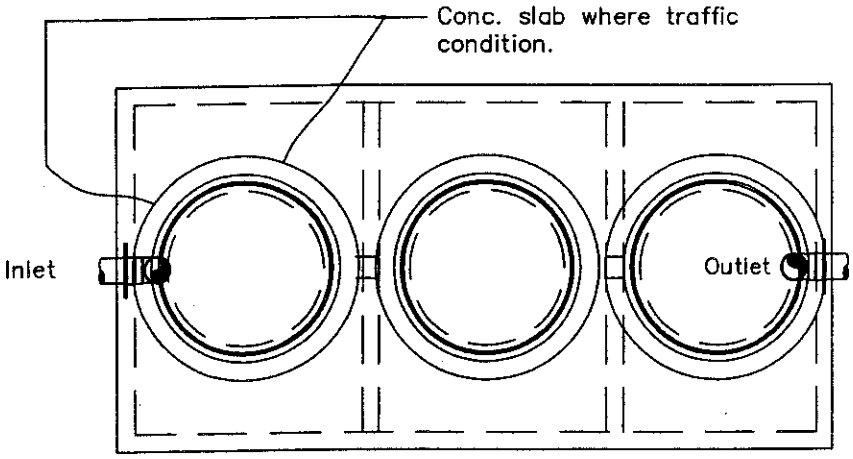

Note:
All waste must enter through inlet fitting only.

PLAN

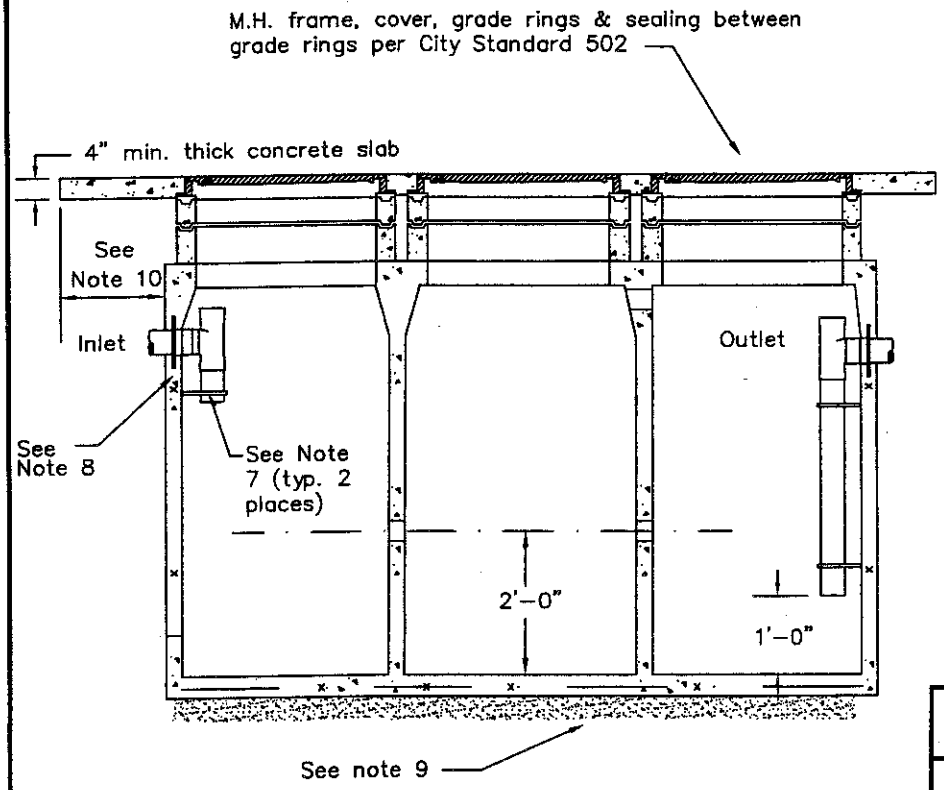

SECTION

Notes:

1. Pre manufactured tank shall be per Engineer's approved list.
2. All grease interceptors shall be located outside public right-of-way except with written approval of the Director of Public Works.
3. Grease interceptors shall be located outside of buildings in a location accessible to wastehauler pumper. Location subject to the approval of the Director of Utilities.
4. Tank capacity to be determined at the time of permit application.
5. Alternate design by a Registered Engineer may be substituted for review by the City.
6. Interceptor to be used in conjunction with "Sampling Manhole" per City Std. 521.
7. Stainless steel clamp and bolts 3'-0" o.c. max. (typ.) min. 2 req'd.
8. A waterstop consisting of a standard manhole adapter gasket as supplied by the pipe manufacturer shall be grouted into the interceptor wall near the center of the inlet and outlet walls.
9. Place 3" min. bedding material per City Standard 215.
10. Concrete slab to extend min. 24" beyond all sides of tank in traffic areas.
11. Install interceptor per manufacturer's specifications.
12. Pipe and fittings to be 4" schedule 40 PVC DWV.
13. All surface water must drain away from manholes.
14. All waste must enter through inlet fittings only.
15. Protective coating shall cover all internal surfaces and meet the criteria of ASTM-309.

CITY OF SANTA ROSA		
THREE STAGE SAND AND GREASE INTERCEPTOR		
SCALE: NONE	DATE: Sept.2002	
DWN: RH CHK: PM	APPROVED	FILE NO. STD.- 520

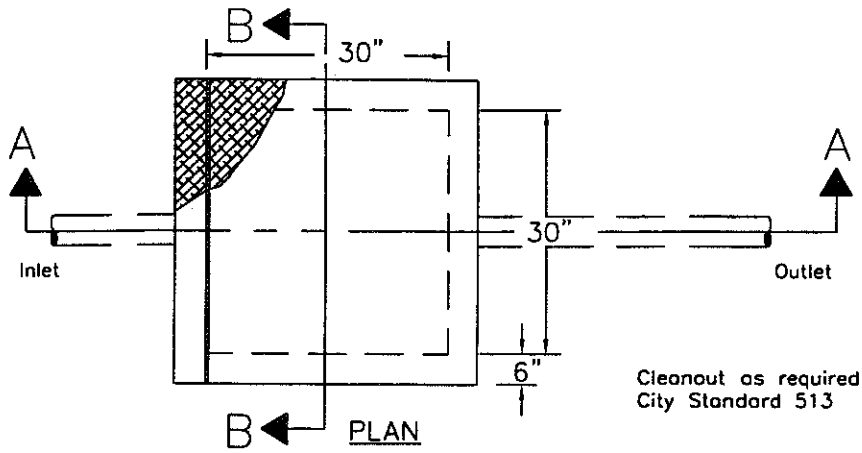

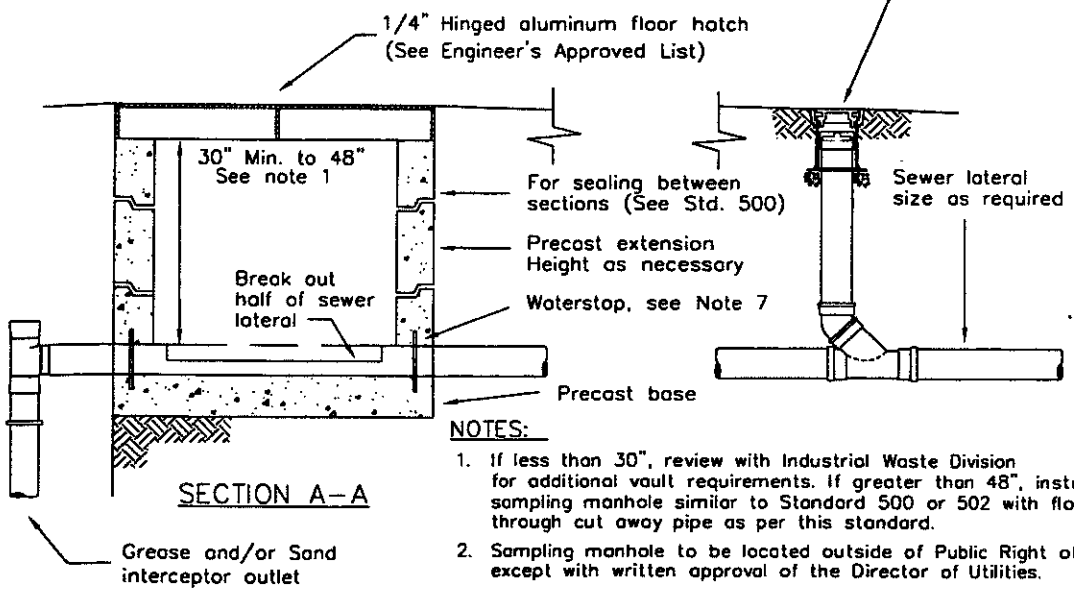

NOTES:

1. If less than 30", review with Industrial Waste Division for additional vault requirements. If greater than 48", install sampling manhole similar to Standard 500 or 502 with flow through cut away pipe as per this standard.
2. Sampling manhole to be located outside of Public Right of way except with written approval of the Director of Utilities.
3. An alternative design by a Registered Engineer may be submitted for review by the Utilities Department.
4. Location subject to the approval of the Director of Utilities.
5. Manhole shall be 30" x 30" inside dimension precast box with 24" x 24" hinged aluminum floor hatch.
6. All surface water must drain away from sampling manhole.
7. A waterstop consisting of a standard manhole adapter gasket as supplied by the pipe manufacturer to be grouted into the box wall near the center of the wall.

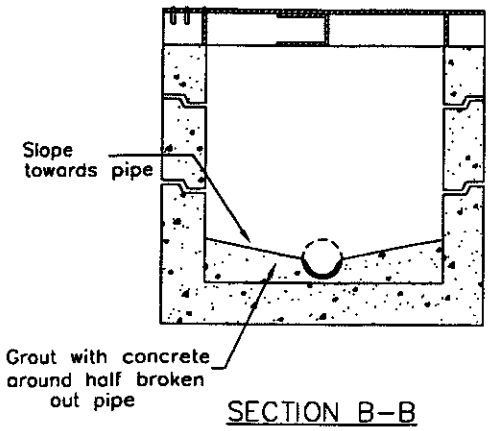

CITY OF SANTA ROSA	
SAMPLING MANHOLE EXTERIOR USE	
SCALE: NONE	DATE: Sept.2002
DWN: RH CHK:	APPROVED FILE NO. STD.- 521

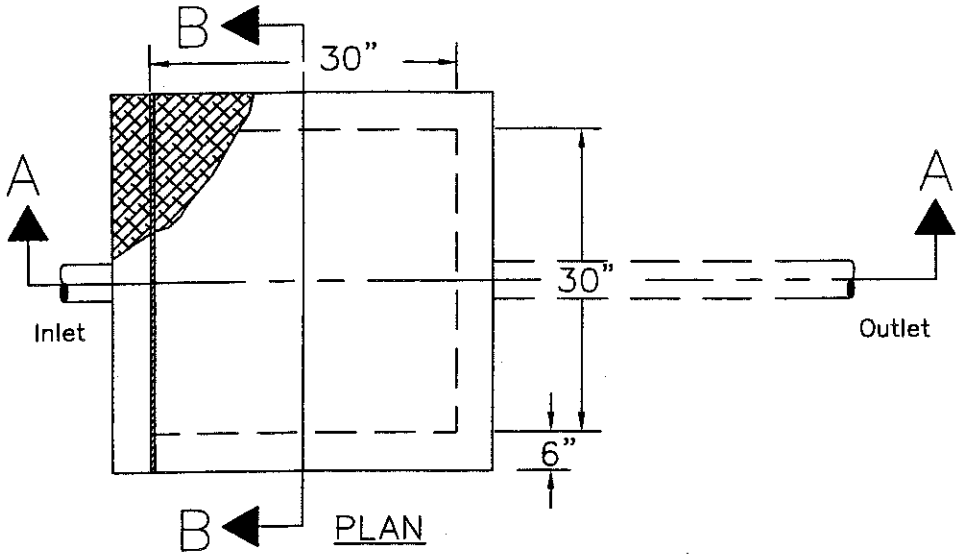

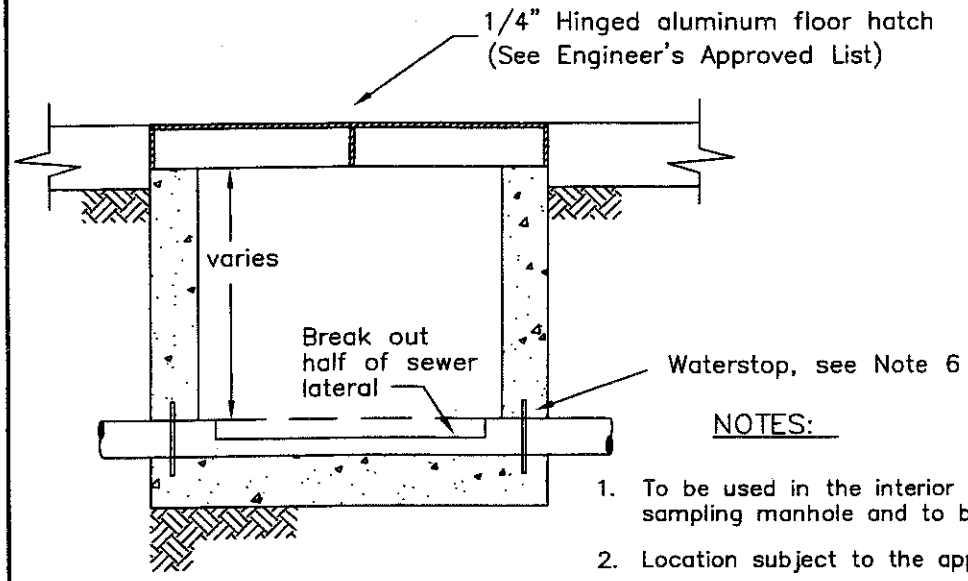

SECTION A–A

NOTES:

1. To be used in the interior of buildings in conjunction with sampling manhole and to be upstream of the sampling manhole.
2. Location subject to the approval of the Director of Utilities.
3. An alternative design by a Registered Engineer may be submitted for review by the Utilities Department.
4. Box shall be 30" x 30" inside dimension precast box with 24" x 24" hinged aluminum floor hatch.
5. All surface water must drain away from sampling box.
6. A waterstop consisting of a standard manhole adaptor gasket as supplied by the pipe manufacturer to be grouted into the box wall near the center of the wall.

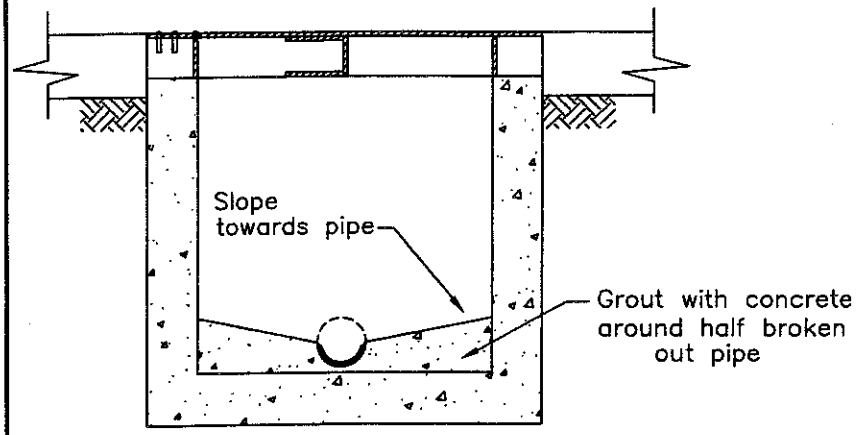

SECTION B–B

CITY OF SANTA ROSA		
SAMPLING BOX BUILDING INTERIOR		
SCALE: NONE	DATE: Sept.2002	
DWN: RH CHK: G.C.	APPROVED	FILE NO. STD.– 522

Notes:

1. Pre manufactured tank shall be per Engineer's approved list.
2. All grease interceptors shall be located outside public right-of-way except with written approval of the Director of Public Works.
3. Grease interceptors shall be located outside of buildings in a location accessible to waste hauler pumper. Location subject to the approval of the Director of Utilities.
4. Tank capacity to be determined at the time of permit application.
5. Alternate design by a Registered Engineer may be substituted for review by the City.
6. Interceptor to be used in conjunction with "Sampling Manhole" per City Std. 521.
7. Stainless steel clamp and bolts 3'-0" o.c. max. (typ.) min. 2 req'd.
8. A waterstop consisting of a standard manhole adapter gasket as supplied by the pipe manufacturer shall be grouted into the interceptor wall near the center of the inlet and outlet walls.
9. 3" min. bedding material per City trench standards.
10. Concrete slab to extend min. 24" beyond all sides of tank in traffic areas.
11. Install interceptor per manufacturer's specifications.
12. Pipe and fittings to be 4" schedule 40 PVC DWV.
13. All surface water must drain away from manholes.
14. All waste must enter through inlet fittings only.
15. Protective coating shall cover all internal surfaces and meet the criteria of ASTM-309.

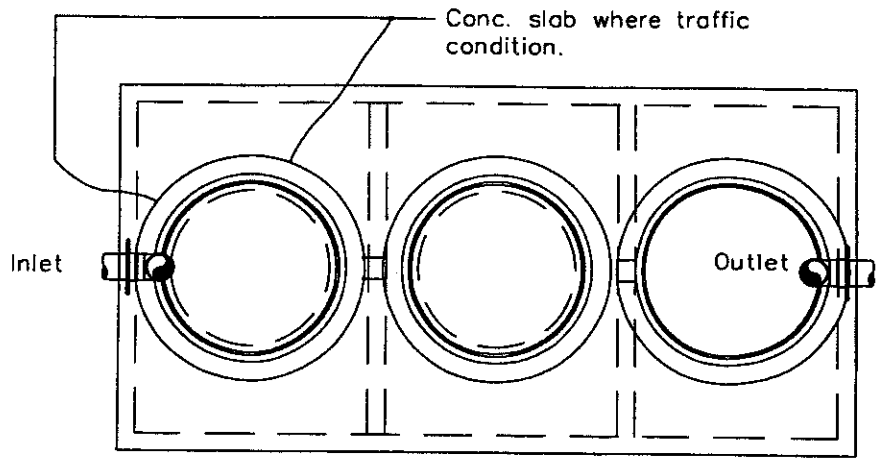

Note:
All waste must enter through inlet fitting only.

PLAN

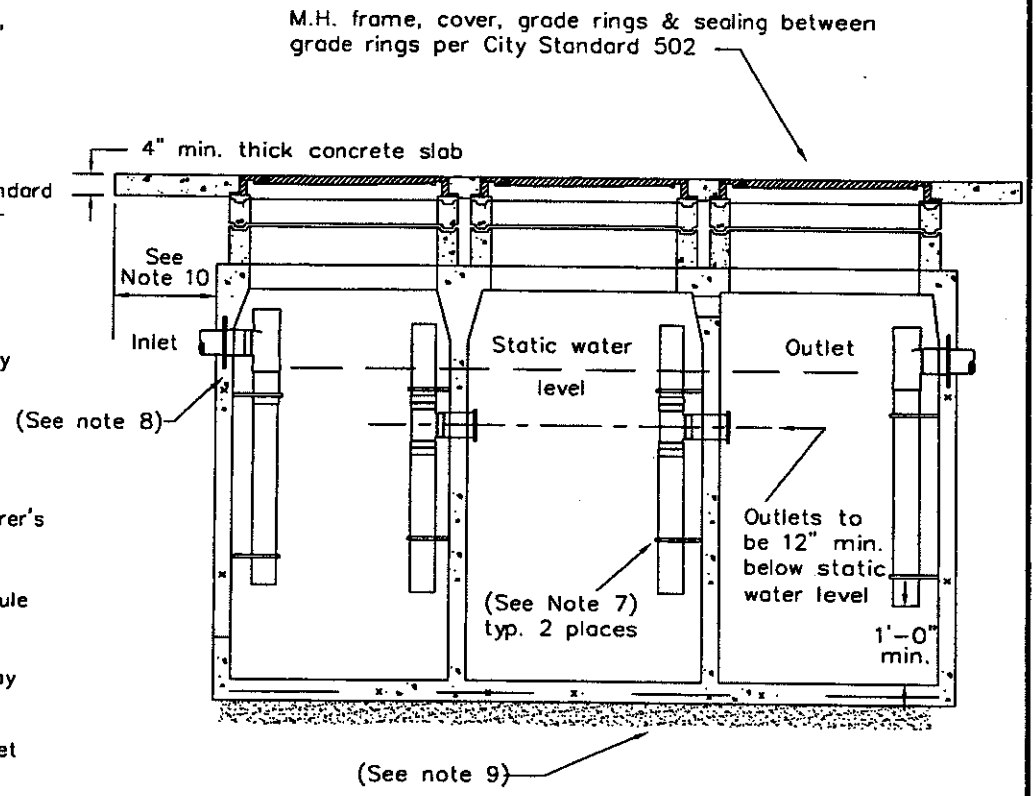

SECTION

CITY OF SANTA ROSA	
THREE STAGE GREASE INTERCEPTOR	
SCALE: NONE	DATE: Sept.2002
DWN: RH CHK: PM	APPROVED FILE NO. STD.- 523

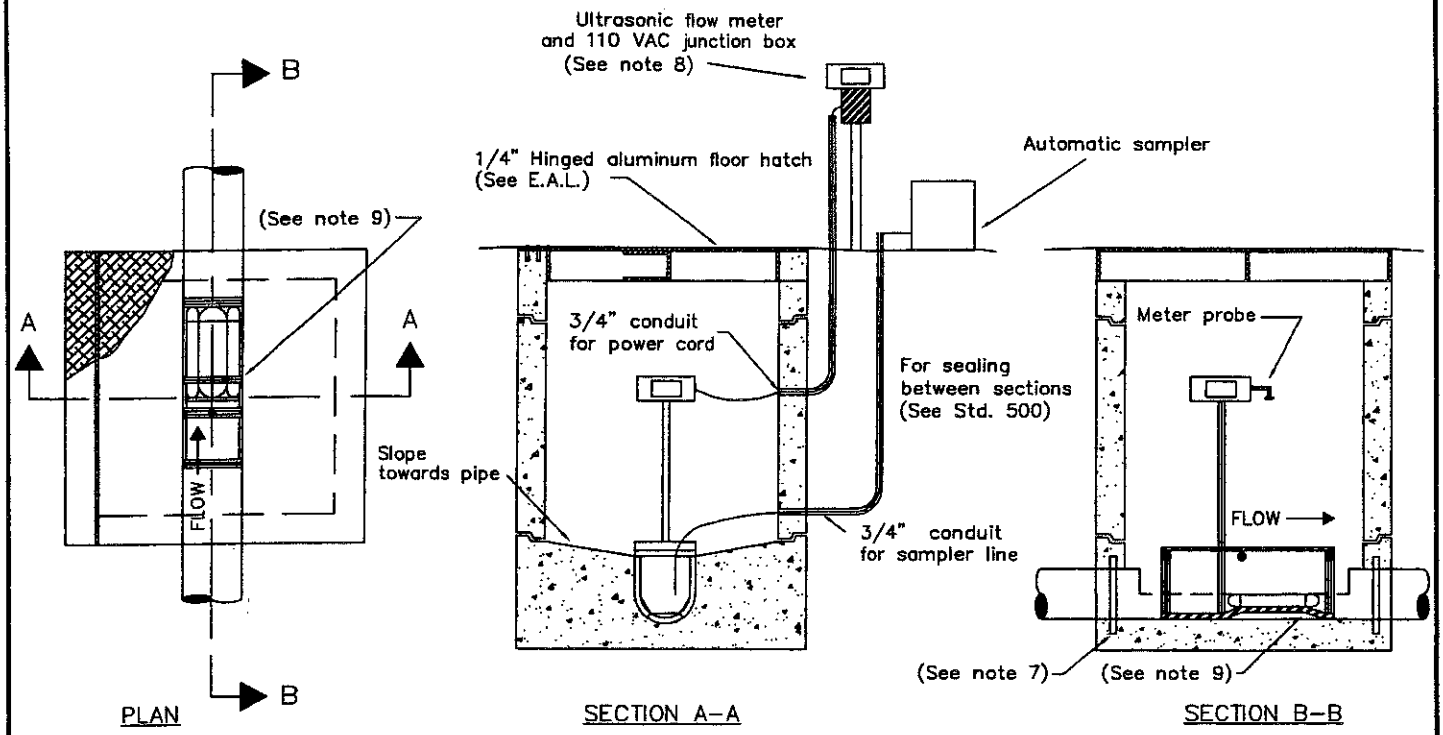

Notes:

1. If less than 30" , review with Environmental Services Division for additional vault requirements. If greater than 48", install sampling manhole similar to Standard 500 with flow through cut away pipe as per this standard.

2. Sampling manhole to be located outside of public right–of–way except with written approval of the Director of Utilities. The sampling manhole shall be situated in a secure location.

3. An alternative design by a Registered Engineer may be submitted for review by the Utilities Department.

4. Location subject to the approval of the Director of Utilities.

5. Manhole shall be 30" x 30" inside dimension precast box with 24" X 24" hinged aluminum floor hatch.

6. All surface water must drain away from sampling manhole.

7. A waterstop consisting of a standard manhole adapter gasket as supplied by the pipe manufacturer to be grouted into the box wall near the center of the wall.

8. Install 110 VAC Junction box for 4–20MA to provide pulse output for flow proportional sampling.

9. Install a Palmer Bowlus, Parshall Style flume, or approved equal per manufacturer's recommendations. Flume shall be placed in the center of the box.

CITY OF SANTA ROSA		
CONTROL SAMPLING MANHOLE		
SCALE: NONE	DATE: Sept.2002	
DWN: RH CHK: GC	APPROVED	FILE NO. STD.- 524

CONCRETE PAD

Reinforced with
6" x 6" / 10 x 10
welded wire fabric

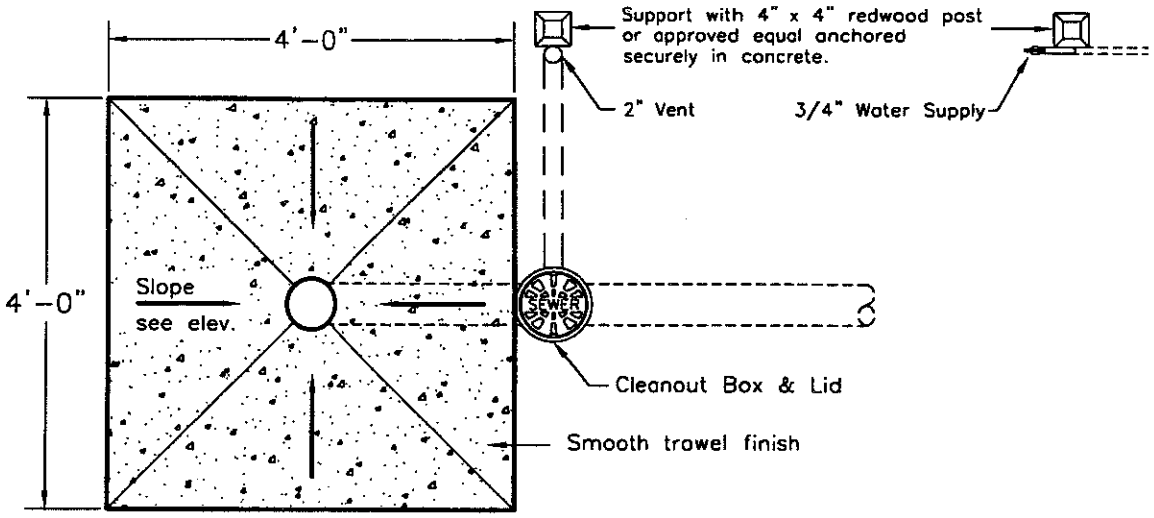

PLAN VIEW

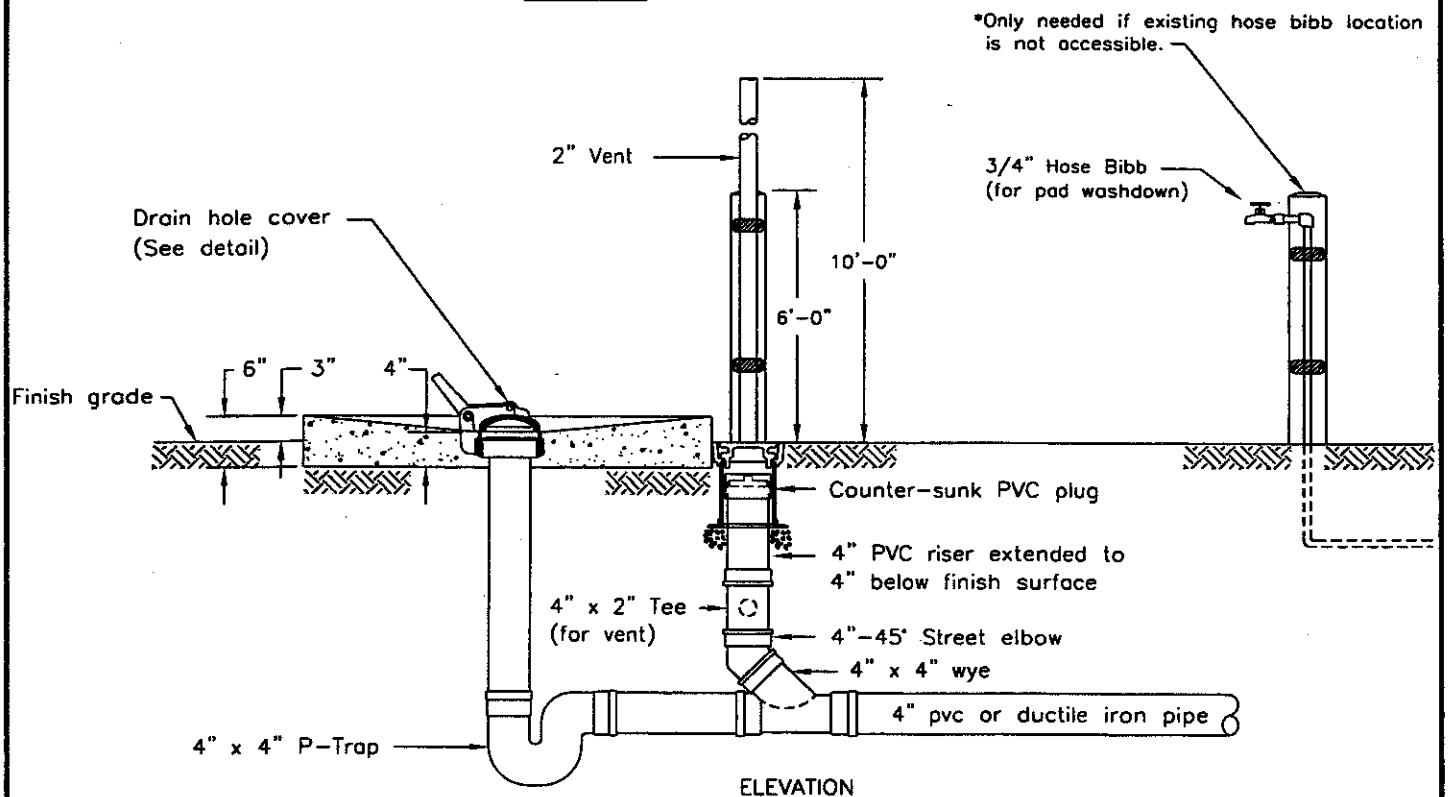

ELEVATION

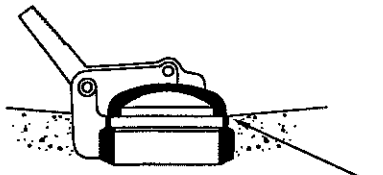

Cast cover in slab so lip of opening is flush for washdown.

VAREC Fig. 46 drain hole cover assembly foot operated, cast iron body, bronze cover, or an approved equal.

DRAIN HOLE COVER DETAIL

NOTES:

1. Must install Reduced Pressure Backflow Prevention Device on water service prior to installation of this disposal facility. See Std. 876.
2. See Std. 514 & Engineer's approved list for cleanout box and cover.

CITY OF SANTA ROSA	
RECREATIONAL VEHICLE DISPOSAL FACILITY	
SCALE: NONE	DATE: Sept.2002
DWN: GC CHK:	APPROVED FILE NO. STD.- 525

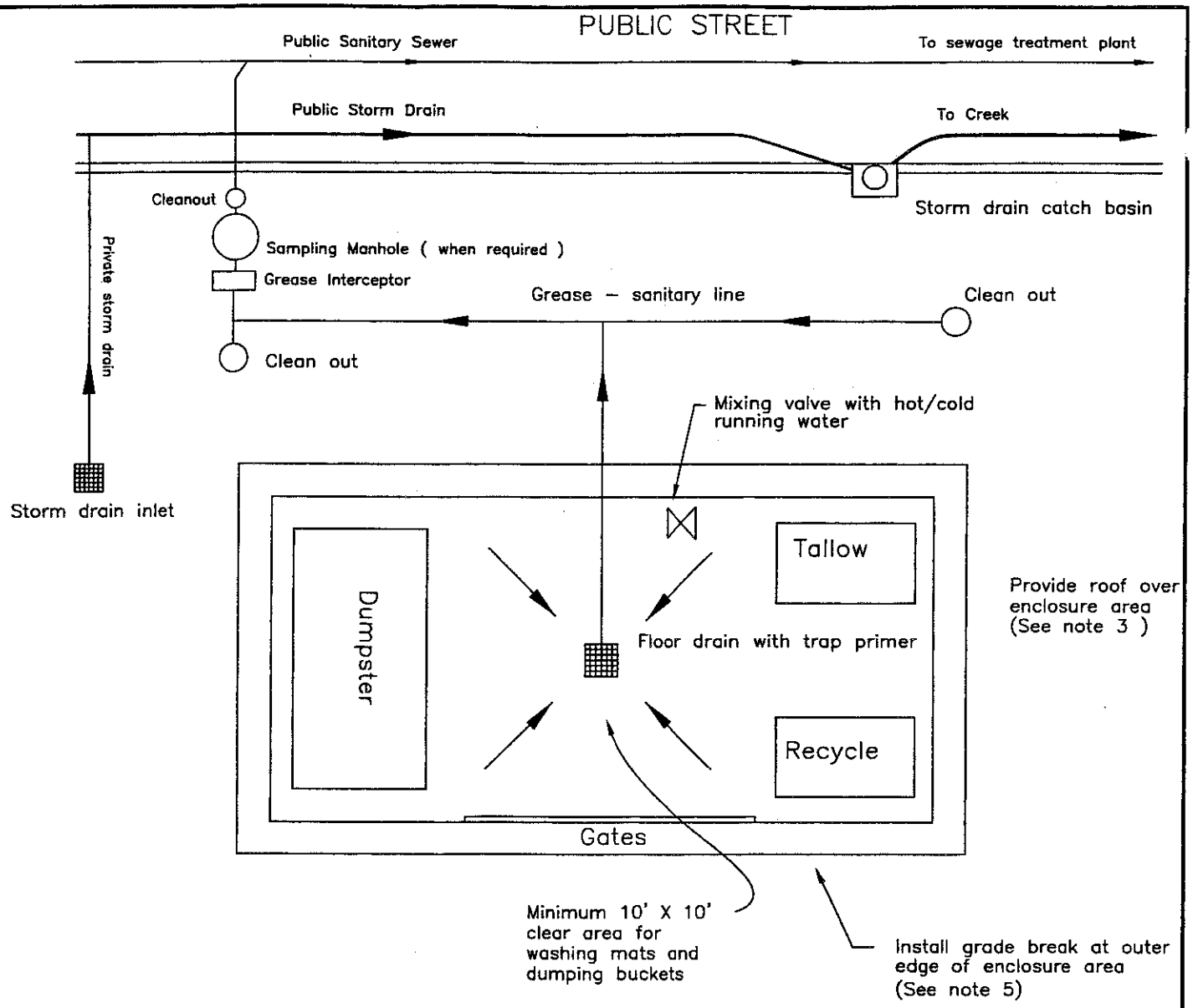

NOTES:

1. All waste storage, recycling containers including dumpsters, tallow bins, and mat washing to be located in an enclosed area. The enclosure shall be designed to prevent any waste or garbage from entering the storm drain system, to contain spills within the enclosure, facilitate cleaning, and to prevent rainwater from entering the enclosure.

2. Minimum height of enclosure shall be 7 feet.

3. A roof structure is required to prevent rain water from entering the dumpsters, containers, or the sanitary sewer. Roof structure shall be high enough to allow clearance for opening dumpsters.

4. The enclosure shall have a floor drain, with trap primer, and shall be connected to a grease interceptor which discharges to the sanitary sewer. The floor drain shall be connected to a minimum size interceptor equivalent to a Zurn Model Z1170, size 700 35/70 grease trap equipped with a flow control valve. size 700 35/70 grease trap equipped with a flow control valve.

5. Finished surfaces surrounding enclosure shall provide drainage away from enclosure.

6. All Food Facility Enclosures require a Building Permit and Design Review approval from the Community Development Department. The enclosure shall conform to all provisions of the California Fire Code and California Building Code. Enclosure walls and roof must be designed by an licensed architect, civil engineer or structural engineer.

CITY OF SANTA ROSA		
FOOD FACILITY ENCLOSURE		
SCALE: NONE	DATE: Sept.2002	
DWN: RH CHK:	APPROVED	FILE NO. STD.-526

3. SEWER SYSTEM CONSTRUCTION STANDARD SPECIFICATIONS

SECTION 71. SEWERS

71-1.02 Materials

Sewer pipe shall be ductile iron pipe, or polyvinyl chloride pipe.

71-1.02A Polyvinyl Chloride (PVC) Pipe

PVC solid wall sewer pipe and fittings for gravity sewers shall be made from all new, rigid, unplasticized polyvinyl chloride in accordance with ASTM D-3034 and F-679 and shall have a minimum pipe stiffness of 46 psi. Joints shall be gasketed and conform to the requirements of ASTM D-3139 and ASTM F-477.

All pipe shall have a home mark to indicate full penetration of the spigot when the joint is made. Bevel and lubricate all field cut PVC pipe before joining.

All PVC pipe entering or leaving a concrete structure shall have a standard manhole gasket, as supplied by the pipe manufacturer, firmly clamped around the pipe exterior and cast into the structure base or near the structure wall center as a water stop.

71-1.02B Restrained Joint (PVC) Pipe and Fittings

Restrained joint PVC pipe and fittings shall conform to the requirements of ASTM D-2241. Joints shall be gasketed and conform to the requirements of ASTM D-3139 and ASTM F-477.

71-1.02C Ductile Iron Pipe

Ductile iron pipe shall be cement lined, new pipe conforming to AWWA Standard C151, pressure class. The pipe shall be furnished with rubber gasket push-on, or mechanical joints, except where specified on the plans.

All ductile iron pipe buried underground shall be encased in polyethylene film in the tube form. Polyethylene material and installation procedure for the encasement shall conform to ANSI/AWWA C105/A21.5-99 or most recent issue.

Couplings for connection to the sewer main shall be of a type approved by the City Engineer.

71-1.02D Ductile Iron Restrained Joint Fittings

Restrained joint fittings shall be ductile iron in accordance with applicable requirements of ANSI/AWWA C111/A21.11 and ANSI/AWWA C153/A21.53 of latest revision and shall be compatible with the type and pressure class of pipe used.

71-1.03 Excavation and Backfill

Excavation and backfill shall conform to Standard 215, "Standard Trench Detail" of the City of Santa Rosa Standard Plans.

All stumps and large roots encountered during trenching operations shall be removed to the satisfaction of the Engineer.

The trench shall be opened sufficiently ahead of the pipe laying operations to reveal obstructions. Trench crossings shall be provided as necessary to accommodate public travel and to provide convenient access to adjacent properties. Flow shall be maintained in any sanitary sewers, storm drains, water lines, or water courses encountered in trenching.

All cutting, handling and disposal of asbestos cement pipe shall be done in accordance with the Contractor's State Licensing Law and all applicable laws and regulations.

When the public works involved will exceed an estimated $25,000 for the excavation of any trench or trenches five feet or more in depth, the Contractor shall, except for subdivisions, submit to the City Engineer for acceptance in advance of job excavation, a detailed plan showing the design of shoring, bracing, sloping, or other provisions to be made for worker protection from the hazard of caving ground during the excavation of such trench or trenches. If such plan varies from the shoring system standards established by the construction safety orders, the plan shall be prepared by a registered civil or structural engineer. A permit to do the above described work must be obtained from the State of California, Division of Industrial Safety. Proof of such permit shall be submitted to the Engineer prior to starting the trench work.

Excess Material from excavation shall become the property of the Contractor and shall be disposed of to the satisfaction of the Engineer. Prior to disposal of any materials or operation of any equipment on sites provided by the Contractor for disposal of excess trench excavation owned by him, the Contractor shall submit to the Engineer written authorization for such disposal of materials and entry permission signed by the owners of the disposal site and the required permits.

71-1.04 Existing Manholes

Existing manholes and clean outs located within the street right of way shall be adjusted to conform to finished pavement grades in accordance with the details shown on the plans.

Prior to the removal of an existing manhole frame, a platform shall be constructed in the manhole above the top of the sewer to prevent any dirt or debris from falling into the sewer. The platform shall remain in place until all work on the manhole has been completed and the asphalt concrete has been placed around the manhole. Prior to the removal of the platform from the manhole, all dirt and debris shall be removed.

Lowering of the manhole ring and cover shall be accomplished by the removal of existing concrete grade rings below the manhole ring or by removing the upper section of manhole barrel and substituting therefore a shorter section of barrel.

At the Contractors option, in lieu of removing and replacing barrel sections as above provided, the top of the existing upper barrel section may be trimmed and the taper section replaced on such trimmed surface provided, however, that such trimming shall not crack or otherwise damage the remaining portion of barrel section.

In the event that the portion of barrel section to remain is cracked or damaged or otherwise made unsuitable for use by such trimming, the entire section shall be removed and replaced with a new section of barrel.

Trimming of taper sections is not permitted.

All sections of the manhole shall be set in cement mortar or in approved gasket material. Trim excess gasket material and plaster inside joints smoothly. Manhole sections set in cement mortar shall be smoothly plastered inside and out.

After placing the surface course of asphalt concrete, all manholes and cleanouts shall be located and marked with white paint before the close of that working day.

Within two working days of paving, all manholes and clean out shall be adjusted to grade and inspected.

Existing grade adjustment rings in the adjustment of manhole frames shall become the property of the Contractor and, if undamaged and thoroughly cleaned of mortar, may be reused in the work. If not so used, they shall be disposed of away from the site of the work at the expense of the Contractor.

71-1.05 Pipe Laying

Where ground water occurs, pumping shall continue until back filling has progressed to a sufficient height to prevent flotation of the pipe. Water shall be disposed of in such a manner as to cause no property damage or not be a hazard to public health.

Where construction consists of constructing a new main or extension of an existing main, the downstream end of the new main shall be securely closed with a tight fitting plug until the construction is accepted by the Engineer.

If the new sewer main is connecting to an existing main at a location other than an existing manhole, the Contractor shall pothole the existing sewer main to verify invert grades and locations.

Sewer pipe shall be installed on the alignment and grade as shown on the plans and in accordance with the Standard Specifications, or as directed by the Engineer. Existing sewer laterals shall be removed and replaced at the locations shown on the plans, or as directed by the Engineer.

Sewer pipe shall be laid in straight lines and on uniform rates of grade between points where changes in alignment or grade are shown on the plans. The interior of the pipe shall be free of foreign matter before lowering into the trench.

The pipe manufacturer's written instructions covering the installation of his pipe shall be closely followed unless otherwise directed by the Engineer or these Special Provisions. The trench shall not be backfilled until authorized by the Engineer. Pipe laying shall proceed upgrade with the spigots pointing in direction of flow. The invert of the pipe shall be set at required line and grade as determined from batter boards set not over 25 feet apart.

Electro-optical grade setting devices may be used provided that the device will be operated by a person proficient in its operation.

Any section of pipe found to be defective or which has had grade or joints disturbed shall be re-laid by the Contractor at his expense.

Proper implements, tools and facilities satisfactory to the Engineer shall be provided and used by the Contractor for the safe and efficient execution of the work. All pipe, fittings and accessories shall be carefully lowered into the trench by means of derrick, ropes, or other suitable equipment in such a manner as to prevent damage to pipe and fittings. Under no circumstances shall pipe or accessories be dropped or dumped into the trench. The pipe and accessories shall be inspected for visible defects prior to

lowering into trench. Any visibly defective or unsound pipe shall be replaced.

The line and grade of existing utilities shall not be altered. Any leakage caused in existing utilities by reason of the Contractor's operations shall be immediately repaired at the Contractor's expense.

Existing storm drains shall be supported or removed and replaced at the Contractor's option. In any case, the Contractor shall be responsible for maintaining the existing line and grade of the storm drains. If the contractor elects to remove and replace, backfill shall be in conformance with City STD-215.

Existing water lines shall be supported in place with service maintained during construction. The Contractor shall be responsible for any damage to the water lines during construction and any damage resulting from improper backfilling.

Existing sewer lines shall be supported in place with service maintained during construction. The Contractor may, at his option, remove and replace any sewer laterals which are not in use during construction. The Contractor shall be responsible for damage to sewer lines during construction and any damage resulting from improper backfilling.

Sewer lateral inverts shall be set above the mid point of the sewer main.

71-1.07 Sewer Structures

Manholes shall be standard precast concrete manholes as detailed on City STD-500. Mains larger than 18" in diameter require 60" diameter manholes. Precast concrete manhole bases must be from list approved by the City Engineer.

Manhole bases may be poured-in-place concrete on undisturbed earth. The bases shall be poured full thickness against the side of the manhole excavation or to dimensions shown on City Std 500. The manhole excavation site shall be dewatered before pouring.

Pre-cast manhole bases, conforming to City Standard 500 in dimensions and the requirements outlined below for materials may be used. Such pre-cast bases shall be placed on a minimum 6 inch thick cushion of drain rock, as specified in City Standard 500. The drain rock shall extend a minimum of 6 inches beyond the outside edges of the base.

Concrete for manhole bases shall be class "A" Portland Cement concrete conforming to the applicable requirements of Section 90 of

the Standard Specifications. The portland cement shall be Type V conforming to ASTM Designation: C 150 or low-alkali-Type II cement meeting the requirements for Type V cement.

Where steel reinforcement is required in manhole base construction, such reinforcement shall be furnished and placed as shown on the plans and in accordance with the applicable provisions of Section 52 of the Standard Specifications.

The base slab and initial riser section shall be connected with integrally poured concrete to create a watertight joint. Flow channels shall be constructed as shown on the plans. Changes in size or grade shall be made gradually and changes in direction by smooth curves. All finished surfaces shall be smoothly troweled with a steel trowel. All manhole barrels and taper section shall be precast concrete sections using Type V portland cement complying with ASTM Designation: C 150 or low-alkali Type II cement meeting the requirements for Type V cement.

The 48-inch and 60-inch diameter barrels and taper sections shall be constructed in accordance with the applicable provisions of ASTM Designation: C 478 and shall be inspected by the Engineer to determine that the interior surfaces are smooth and free of pockets or depressions.

Manhole frames and covers shall be in accordance with City Standard 512. Tops of manhole frames and covers shall be set accurately to finished grade in paved streets and one foot above finished grade in unimproved areas. The frames shall be evenly set on the manhole on a portland cement mortar bed. Where manholes are set above finished grade, the earth shall be mounded up around the manhole in a neat and acceptable manner to the satisfaction of the Engineer.

At locations where sewer is to be installed into or out of existing manholes, the manhole wall and base shall be chipped to accept the new size of pipe and to form a flow channel in the manhole base. The Contractor shall dry pack around the pipe between the pipe and the chipped out opening with high-strength, rapid-set, non-shrink grout. The Contractor shall also backfill in the area around the pipe with concrete to insure a watertight connection.

All joints in manholes shall be sealed by means of a preformed, self-bonding, self-sealing plastic gasket, such as "Ram-Nek", manufactured by the K.T. Snyder Company, Houston, Texas, or approved equal. Joint seals shall be installed in full compliance with the manufacturer's current recommendations.

After placing the surface course of asphalt concrete, all manholes and cleanouts shall be located and marked with white paint before the close of that work day.

Within two working days of paving, all manholes and cleanouts shall be adjusted to grade and inspected.

71-1.08 Testing of Sewers

Testing of all portions of the sewer including manholes is required.

For either exfiltration or infiltration test, the maximum leakage shall not exceed 250 gallons per inch of pipe diameter per mile per 24 hours as measured over a period of 30 minutes minimum. Should the leakage exceed the maximum allowable rate, the contractor shall repair, overhaul, or rebuild the defective portion of the sewer line to the satisfaction of the Engineer at no additional cost to the City. After repairs have been completed by the Contractor, the line shall be retested as specified above, all at no cost to the City.

Manholes, shall be filled with water to the rim of the frame casting and shall lose no more than 2 inches over a period of 30 minutes.

The test shall be performed after the line has been laid and all backfill placed and compacted, including roadway base rock as specified elsewhere in these specifications. The Contractor, at his option, may test the line at any time during construction. However, the final test for acceptance shall be made only after all backfill is in place and compacted.
In the event that the exfiltration test prescribed above is impractical due to wet trench conditions, these portions of the sewer line where such conditions are encountered will be tested for infiltration. The Engineer shall determine whether the exfiltration or infiltration test will be used.

Even though the test for leakage is within the prescribed limits, the Contractor shall repair any obvious leaks.

Low pressure air testing may be used in lieu of water testing at the option of the Contractor. Water testing may be required by the Engineer. The following procedure shall be used for air testing:

1. Clean pipe to be tested by propelling a snug fitting inflated rubber ball through the pipe with water. Remove any debris.

2. Plug all pipe outlets with suitable test plugs. Brace each plug securely.

3. If the pipe to be tested is submerged in ground water, insert a pipe probe, by boring or jetting, into the backfill material

adjacent to the center of the pipe, and determine the pressure in the probe when air passes slowly through it. This is the back pressure due to ground water submergence over the end of the probe. All gauge pressures in the test should be increased by this amount.

4. Add air slowly to the portion of the pipe installation under test until the internal pressure is raised to 5.0 p.s.i.g.

5. Check exposed pipe and plugs for abnormal leakage by coating with a soap solution. If any leakage is observed, bleed off air and make necessary repairs.

6. After an internal pressure of 5.0 p.s.i.g. is obtained, allow at least two minutes for air temperature to stabilize, adding only the amount of air required to maintain pressure.

7. After the two minute period, disconnect the air supply and start stopwatch. The pressure of 5.0 p.s.i.g. shall be maintained for 5 minutes.

8. As an alternate, the contractor may request the air testing procedure as presented in Section 306-1.4.4 of the 1997 edition of the "Greenbook" Standard Specifications.

After pipe installation and placement and compaction of backfill, but prior to placement of pavement, all PVC pipe shall be cleaned and then mandrel tested for obstructions, such as, but not limited to, deflections, joint offsets and lateral pipe intrusions. A rigid mandrel, conforming to City Standard 518 shall be pulled through the pipe by hand. The minimum length of the circular portion of the mandrel shall be equal to the nominal diameter of the pipe. All obstructions encountered by the mandrel shall be corrected by the Contractor. Obstructions due to deflection shall be corrected by replacement of the over-deflected pipe. Mechanical re-rounding is not permitted.

If a section of pipe fails to meet the mandrel test and is reinstalled and fails the second time, said section(s) of pipe shall be replaced with an approved rigid pipe material.

The contractor shall furnish mandrel as shown on the City Standards.

The Contractor shall retest PVC pipe using a mandrel conforming to City Standard 518 eleven (11) months after recordation of Notice of Completion of a Public Works Sewer Contract or after the acceptance by the City Council of a subdivision. Any pipe which fails to pass the mandrel test shall be replaced at the expense of the Contractor. The City reserves the right to determine the

longitudinal limits of any pipe that is required to be replaced. Pipe replacement shall be guaranteed by the project maintenance bond.

The Contractor shall hire an independent television inspection service to perform a closed-circuit television inspection of all newly constructed sewers including laterals from the main to the cleanout. A video tape of the television inspection shall be produced and delivered to the Engineer in color VHS format, together with a typed log of the inspection. The following conditions shall exist prior to the television inspection:

1. All sewer lines shall be in installed, backfilled and compacted;

2. All structures shall be in place, all channeling complete and all pipelines accessible from structures;

3. All other underground facilities, utility piping and conduit within two feet of the sewer main, shall be installed;

4. All compaction required shall be completed;

5. Pipelines to be inspected shall be balled, flushed and mandrel tested;

6. The final air or water test shall have been completed.

7. Immediately before the television inspection, run fresh water into the sewer until it passes through the downstream manhole.

When the above work has been completed, the Contractor shall notify the Engineer 48 hours in advance of the date for television inspection. During this inspection, the Contractor or his authorized representative shall be present to observe the video pictures as provided by the television camera.

The following video tape observations shall be considered defects in the construction of the sewer pipelines and will require corrections prior to acceptance:

1. Off grade - 0.08 foot, or over, deviation from grade;

2. Separations over 2" in pipe joints using couplers;

3. Joint separations over 3/4";

4. Offset joints;

5. Chips in pipe ends - none more than 1/4" deep;

6. Cracked or damaged pipe or evidence of the presence of an external object bearing upon the pipe (rocks, roots, etc.);

7. Infiltration;

8. Debris or other foreign objects;

9. Other obvious deficiencies when compared to Approved Plans and Specifications, these Standards and Standard Drawings.

The contractor shall be notified in writing of any deficiencies revealed by the television inspection that will require repair, following which the Contractor shall excavate and make the necessary repairs and request a television re-inspection. Television re-inspection shall be at the contractor's expense.

71-1.09 Trench Resurfacing

Trench resurfacing shall be as shown on Standard 215, "Standard Trench Detail" of the city of Santa Rosa Standard Plans.

4.

ENGINEER'S LIST OF APPROVED ITEMS
FOR USE WITH SEWER SYSTEM CONSTRUCTION
STANDARDS APPROVED SEPTEMBER 2002

EFFECTIVE: **OCTOBER 2002**

Standard 500 - Standard Precast Concrete Manhole for Sanitary Sewer

Precast base	Connectors
Cook Concrete Products, Inc.	Cast in PVC Coupler
Central Precast Concrete, Inc.	"A LOK" or "A LOK X-CEL"

<u>Note</u>: City will require shop drawings submitted for approval.

Manhole Interior Coatings
- Koester NB1
- Tegraproof
- Xypex

Manhole Interior Patch Material
- All Crete 20
- All Patch 5
- All Patch 20
- Rapid Set Mortar Mix
- Rapid Set Cement All
- SikaSet Mortar
- Speed Crete Red
- Speed Crete Blue
- Xypex Patch and Plug

Standard 504 - Outside Drop Manhole

Couplings for drop connections

APAC	300 Series
Dresser	Style 253
Power Seal	3500 Series
Romac	501 Series
Smith-Blair	441 Series

Standard 505 - Rodding Inlet

Rim and Cover

D & L Supply	H8026 CPH
South Bay Foundry	SBF 1257

Standards 506 - Temporary Mainline Cleanout

Rim and Cover

D & L Supply	H6531
South Bay Foundry	SBF-1249

Standard 512 - Manhole Frame and Cover

Manhole Frame and Cover

D & L Supply	A-1024M
South Bay Foundry	SBF 1900 CPH

Manhole Frame and Cover w/ bolt down cover

D & L Supply	E-1928
South Bay Foundry	SBF 1900 BS

Standard 513 - 4" & 6" Sewer Service Lateral & Cleanout

Cleanout Box 4"

D & L Supply	M-8030
Geneco	CC4 w/Lid marked sewer
South Bay Foundry	B5230

Cleanout Box 6"

Geneco	CC6 w/Lid marked sewer

Flush mount"T"Cone Plug

ETCO	CO-402

Flush Plug 4" & 6"

Multi Fittings	40492 - 4"
	40958 - 6"

Female Adapter 4" & 6"

Multi Fittings	40949 - 4"
	40952 - 6"

Saddle or Taps

Geneco	Sealtite
Tap-tite	
Romac	Style "CB" Sewer Saddle

Couplings

Joints, Inc.	Calder Couplings
Fernco	1051-44, 1056-44, 1002-44
Indiana Seal	156-44
Mission	Band-Seal Couplings
	Flex-Seal Couplings

Standard 516,517 - Sewer-Water Main Crossing Details
Miscellaneous Pipe Installation Details

Couplings

APAC	300 Series
Dresser	Style 253
Fernco	1000 Series
Joints, Inc.	Calder Couplings
Maxifit	MaxiDaptor
Mission	Band-Seal Couplings
	Flex-Seal Couplings
Powerseal	3500 Series
Romac	501 Series
Smith-Blair	441 Series
Tyler Pipe	5-144L
U.S. Pipe	U-584

Standard 519 - Two Stage Grease Interceptor

Pre Manufactured Tanks
- Jonson Precast
- McNothingham Concrete Precast
- Selvage Concrete Products

Standard 520 - Three Stage Sand and Grease Interceptor

Pre manufactured Tanks
- Central Precast Company (SRCAST)
- McNothingham
- Selvage Concrete Products

Standard 521 - Sampling Manhole Exterior Use

Precast Base
- Aluminum Floor Hatch

FHA-H20 Load Angle Frame
Johnson Products
Nystrom

Standard 522 - Sampling Box Building Interior

Precast Box
Aluminum Floor Hatch
FHA-H20 Load Angle Frame
Johnson Products
Nystrom

Standard 523 - Three Stage Grease Interceptor

Tanks
Central Precast Company (SRCAST)
Johnson Products
McNothingham
Selvage Concrete Products

Standard 524 - Control Sampling Manhole

Precast Box
Aluminum Floor Hatch

Standard 525 - Recreational Vehicle Disposal Facility

Cleanout Box & Cover
See Std. 513

APPROVED:

MILES A. FERRIS
Director of Utilities - City Engineer

U\Eng\STANDARDS\EALSEWER9-2002.wpd

CITY OF SANTA ROSA

WATER STANDARDS

Adopted by the Santa Rosa City Council
Resolution No. 25372
September 10, 2002

TABLE OF CONTENTS

1. **Water System Design Standards**

2. **Water System Construction Standards**

3. **Water System Construction Standards Specifications: Section 99. Water Main Construction.**

4. **Engineer's List of Approved Items.**

1.

WATER SYSTEM DESIGN STANDARDS

Adopted by the Santa Rosa City Council
Resolution No. 25372
September 10, 2002

TABLE OF CONTENTS

I. PURPOSE 1
II. REQUIREMENTS FOR IMPROVEMENTS AND SUBDIVISION MAPS 1
III. WATER MAINS - GENERAL 2
IV. MATERIALS 3
V. CONNECTION TO AN EXISTING PUBLIC WATER MAIN 4
VI. ALIGNMENT 4
A. Horizontal 4
B. Vertical 5
VII. MAIN SIZING CRITERIA 6
VIII. MAIN/LATERAL COVER 6
IX. VALVING 7
X. SERVICE LATERALS AND METERS FOR DOMESTIC AND IRRIG. SERVICE 7
XI. PUBLIC IMPROVEMENTS FOR PRIVATE FIRE SYSTEMS 11
XII. FIRE HYDRANTS 12
XIII. BACKFLOW DEVICES (EXCEPT FOR FIRE LINES) 14
XIV. PRESSURE 15
XV. SPECIALTY VALVES AND WATER SAMPLING STATIONS 15
XVI. SPECIAL CONDITIONS FOR DELINEATED FAULT ZONES 16
XVII. EASEMENTS 16
XVIII. ABANDONMENT OF WATER MAINS AND SERVICES 17

APPENDIX "A" - CRITERIA FOR THE SEPARATION OF WATER MAINS AND SANITARY SEWERS 18

APPENDIX "B" - BACKFLOW DEVICE REQUIREMENTS FOR SPECIFIC TYPES OF USE 28

WATER SYSTEM DESIGN STANDARDS

I. PURPOSE

To provide guidelines for the design of water utilities projects and thereby reduce the time required for processing the plans. These guidelines do not include, but may reference, additional conditions which may be promulgated by all other pertinent ordinances, codes, and official policy set forth by the Utilities Department or other departments of the City of Santa Rosa or other government agencies. These guidelines establish minimum acceptable design criteria. More stringent requirements may be imposed by the Director of Utilities based on specific project conditions.

Portions of these standards apply to fire systems, both public and private, and are intended as general reference to aid in the design of the public water system. Final designs are subject to approval of the Fire Department.

It is the responsibility of the design engineer to initiate written requests to the Director of Utilities for approval of any design concepts that differ from these criteria, verify additional requirements imposed, perform any necessary calculations or studies, and resolve specific design problems with the appropriate agency, department or division.

II. REQUIREMENTS FOR IMPROVEMENT PLANS AND SUBDIVISION MAPS

A. Provide a detailed utility plan showing onsite and offsite public and private water and fire protection systems, including mains, services, hydrants, and all other required appurtenances, and their connections to existing City-maintained water facilities. Show the location, type, and diameter of public and private water mains. Reference any existing fire hydrants within 300' of the project boundary. Show any wells existing or to be abandoned. When a separate irrigation service is necessary, an irrigation plan is required per section X-O of these standards. (See section XI-B for submittal of plans for private fire systems.)

B. Annotate the local agency information sheet of the Subdivision Map with any information that is needed to notify property owners of requirements for connection to the City water system. These include, but are not limited to:

1. payment of fees prior to issuance of Building Permits,
2. lots requiring pressure regulating valves or booster pumps,
3. backflow protection,
4. public water access requirements, such as gates or access roads.

The appropriate information may be obtained from Utilities Engineering.

C. Miscellaneous specific items required on improvement plans are indicated throughout

these Standards.

D. Before combustible materials may be delivered, stored or constructed on site, fire flow and access must be provided and approved by the Fire Department per current City Fire Code. In addition, public and/or private fire hydrants must be installed, flushed, tested, and operational. This information must be included on all improvement plans. Provide any necessary calculations with the submittal of improvement plans or with the Tentative Map submittal to demonstrate adequate fire flows are available.

III. WATER MAINS - GENERAL

A. Public water mains may not be designed outside the street right-of-way without Director of Utilities approval.

B. In general, publicly maintained water systems will be designed only where they serve multiple ownership lots and where appropriate access for maintenance can be provided.

C. Water mains installed at a slope of 15% or greater will be designed with restrained joints. The Design Engineer must provide adequate drainage measures to protect the trench from erosion.

D. Water mains installed outside of any roadway, called "cross-country mains," must be Ductile Iron Pipe and will have suitable access. In general, cross-country mains must be isolated with valves in the public right-of-way and must be identified with blue locating posts (Carsonite 492 CW-112 or approved equal) at approximate 500' intervals, at any angle point, and at the entrance to an easement. Stakes should have vandal-proof metal bottoms. Access requirements as established in Section XIV of the Sewer System Design Standards may be imposed on a project based on site conditions.

E. For system reliability, to minimize pipe size, and to minimize the number of people affected by a system shutdown, either for domestic or fire protection purposes, no more than 100 residential units may be served by a single-feed water system, providing it is hydraulically adequate. Where more than 100 units are to be served, a dual-feed (or "looping") public water system must be designed to provide a secondary source of water to the project. Onsite private fire requirements, such as dual fire services and looping mains, will be determined by the Fire Department for residential and nonresidential developments.

F. For purposes of leak detection and maintenance access, no reinforced concrete may be designed over publicly maintained water facilities. Unreinforced concrete will be allowed under special circumstances such as crosswalks.

G. Extent of water main improvements will be as follows:

1. Any offsite water main improvements needed to serve the project must be shown on the improvement plans, including upgrades to existing mains that may be required as a result of a flow analysis or modeling effort.

2a. In general, water mains must be designed at least across one-half of the property frontage or to the last service connection, whichever is greater; or

2b. Where the project is required to provide new street improvements over the water main alignment and the water main will serve properties beyond the project limits, the water main must be designed to cross the full property frontage or to the limits of the street improvements, whichever is greater.

H. Streets with both water and sewer mains must be at least 20 feet wide, face-of-curb to face-of-curb. Streets with only a water or sewer main must be at least 16 feet wide. No water or sewer mains may be installed in alleys.

IV. MATERIALS

A. Service laterals will be copper, Polyvinyl Chloride (PVC), or Ductile Iron Pipe (DIP) per applicable City Standards.

B. 8" and 12" public water mains and 4"-12" private fire mains will be Polyvinyl Chloride (PVC) Pressure Class 150, DR18 per AWWA Standard C900, minimum or Ductile Iron Pipe Pressure Class 350 per AWWA Standard C151 minimum. Where the normal mainline static pressure exceeds 100 psi, Ductile Iron Pipe or PVC Pressure Class 200, DR14 must be used.

C. 16" diameter water mains will be Polyvinyl Chloride (PVC) per AWWA Standard C905, DR25 with a pressure rating of 165 psi or Ductile Iron Pipe per AWWA Standard C151, or as shown on plans and specifications. Where the normal mainline static pressure exceeds 100 psi, AWWA Standard C905, DR18 with a pressure rating of 235 psi or Ductile Iron Pipe must be used.

D. 20" diameter and larger water mains will be concrete cylinder pipe, wrapped steel pipe, or Ductile Iron Pipe.

E. Asbestos cement pipe will not be allowed under <u>any</u> circumstances.

V. CONNECTION TO AN EXISTING PUBLIC WATER MAIN

A. Indicate a "hot tap" for connection of service laterals 2" in diameter and smaller.

B. Indicate connection of pipes 4" - 12" in diameter with a hot tap or a cut-in tee in conformance with the provisions of the Water System Construction Standard Specifications Section 99-1.20. Hot taps will be allowed only when no main line valves are required.

C. Design a cut-in tee if additional valves are required on the existing main. If the new main/lateral is larger than the existing main, the tee and main/lateral valve will be the size of the existing main unless it is hydraulically necessary to increase the tee and valve to the size of the new main/lateral.

D. Tie-ins to the existing City water system must be inspected by a Utilities Dept. representative and the improvement plans must be so annotated.

E. Size-on-size taps are allowed up to 8" in accordance with the approved standards. 12" size-on-size taps are allowed only under emergency situations and with the specific approval of the Director of Utilities.

F. In most major streets, or where the street surface is less than five years old, installation methods other than open cutting may be required. The Encroachment Officer or the City Engineer as appropriate will determine the requirements based on the condition of the existing street.

VI. ALIGNMENT

A. Horizontal

1. Alignment will be in accordance with the provisions of Standard 871.

2. The minimum allowable radius of curvature for an 8" water main is 250 feet and for a 12" water main is 350 feet. In situations such as streets that have smaller radius curves, the water system will be designed in straight segments parallel to the sewer or storm drain system so that future locating is simplified.

3. Conform to the State of California Department of Health Services "Criteria for the Separation of Water Main and Sanitary Sewers" (See Appendix "A").

4. The minimum horizontal separation from storm drains, monuments, gas,

electrical, and telephone lines will be 4 feet clear except at crossings.

5. The minimum clear horizontal separation from a metallic pipeline with an induced current or from an anode field will be 5 feet. Where the new water main will be in proximity to an anode field, special design will be required for approval by the Director of Utilities.

6. All public water mains must be designed a minimum 5 feet from all structures, such as manholes or drop inlets. Provide a minimum of 3 feet from the lip of gutter for service connections and repairs. Water mains will be designed a minimum of 5 feet from the edge of easements.

7. All water main trenches that are parallel to and deeper than the footing of any adjacent structure must be designed at least forty-five (45) degrees from the footing as required in the Uniform Plumbing Code. Any exceptions must be approved in writing by the Director of Utilities and the Director of Building and Code Compliance. (See City Std. 517)

8. Where dual water mains are designed, a minimum 5 feet clear horizontal separation will be maintained.

9. In general, water main crossings over or under other underground facilities will be designed as close as 90° to that facility as possible. Crossings of less than 45° will only be approved when no other design is possible.

B. Vertical

1. Generally provide a minimum of 6" of vertical separation from storm drains or other underground utilities such as telephone, cable tv, gas, or electric conduit. When the minimum cannot be maintained, plans will indicate installation of felt expansion material, styrofoam, or equivalent between facilities. Other measures, such as the use of concrete encasement, controlled density backfill, or ductile iron pipe may be submitted for approval of the Director of Utilities. The absolute minimum separation between water and other underground facilities, except sewer mains will be 0.1'.

2. Conform to the State of California Department of Health Services "Criteria for the Separation of Water Main and Sanitary Sewers"(See Appendix "A").

3. Where dual water mains are designed, a minimum 1' clear vertical separation will be maintained.

VII. MAIN SIZING CRITERIA

A. Allowable nominal sizes for public water mains are 8", 12", and 16". Mains larger than 16" must have specific approval of the Director of Utilities.

B. Public water mains must be sized to meet minimum Fire Code requirements in addition to domestic and irrigation demands. Private fire protection mains must be sized to meet minimum Fire Code requirements (see Section XII-L for fire flow requirements).

C. The minimum new public main size is 8 inches. New public mains serving commercial, industrial and/or multi-family residential developments greater than two units, must be a minimum of 12 inches. Existing mains that will serve such proposed uses must be upgraded as needed to meet the current Fire Code.

D. Analysis and design of water systems will be based upon the criteria listed in the City's Water System Master Plan where applicable. The Director of Utilities may require increased pipe size for overall system benefit. When the project is required to provide larger water mains than needed for the development, the applicant may apply to Utilities engineering for oversize reimbursement.

E. Maximum flow velocity for new public or private water mains is 10 feet per second, to be calculated by applying the demands from Section VII-B above.

VIII. MAIN / LATERAL COVER

A. Cover is the distance from the top of the pipe to final finished grade measured directly over the pipe.

B. Typically, the minimum standard depths of cover for public water mains and private fire protection mains are:

Pipe Size	4"	6"	8"	10"	12"	16" or Larger
Cover (in.)	36"	36"	36"	40"	44"	48"

C. Where minimum cover is less than standard or greater than 8', special permission from the Director of Utilities is required. Show mains with nonstandard cover in a profile on the Improvement Plans or Encroachment Permit applications. Where cover is less than the standard, Pressure Class 350 Ductile Iron Pipe is required.

D. Where standard cover cannot be maintained, such as at the crossing of a water main

with a sewer main or any other utility line, either an undercrossing or overcrossing will be chosen based upon the evaluation by the Developer's Engineer. Evaluation will include the need for higher class pipe, use of controlled density backfill as pipe encasement, ability to meet California Criteria for Separation of Water Mains and Sanitary Sewers and the resulting need for air/vacuum release valves. This evaluation will be submitted to the Director of Utilities for review.

E. The minimum cover for service laterals will be as shown on the appropriate City Standard Plan. Where service laterals have conflicts with other facilities, a detail or profile must be shown on the plans, or the plans must be sufficiently annotated to give clear direction for the installation.

F. When designing a cut-in tee for a service or main connection that is larger than the existing main, the new assembly must be shown at a depth sufficient to allow the valves to remain below the street subgrade, which may necessitate lowering the existing main.

IX. VALVING

A. Valving at intersections will be in accordance with the provisions of Standard 871. A minimum of three (3) mainline valves are required for "T" intersections and four (4) valves are required for cross intersections. A valve may not be required on any leg of a tee or cross intersection if another valve is within 250 feet, except as needed to isolate fire hydrants.

B. All hydrants must be on separately valved sections of the public main, including fire lines serving private hydrants.

C. Any water main which does not have a fire hydrant or lateral connection will have valves designed at approximately 1,000 foot intervals or as required by the Director of Utilities.

D. Water main valves must be designed outside of concrete areas wherever possible to facilitate repairs.

X. SERVICE LATERALS AND METERS FOR DOMESTIC AND IRRIG. SERVICE

A. Developments will be provided City domestic and/or irrigation water service via water meters located at the frontage of a public street.

B. The City may allow meters to be located on private street frontages and/or within public utility/water easements if the City Utilities Dept. evaluation concludes that it

is reasonable under the circumstances. However, meters must be readily accessible.

C. Design meter boxes out of traveled ways and a minimum of 10' from street trees whenever possible.

D. Base any required hydraulic calculations for the water meter and service lateral sizes on criteria from AWWA Manual M22 and submit to the Director of Utilities for approval.

E. The maximum velocity in domestic, irrigation, fire line, or combination water service laterals from the main to the meter is 15 feet per second.

F. Maintain a minimum 5' horizontal separation between water and sewer laterals.

G. Meter manifolds other than those shown in various City Standard Plans will be detailed on the plans and approved by the Utilities Department, Engineering Division.

H. Residential (single units)

1. Each lot must be separately metered.

2. A standard 1" dual water service lateral is preferred when practical to serve two single-family residential lots, providing each lot is less than ½ acre. Otherwise, provide an individual 3/4" service lateral for a 5/8" meter for each lot.

3. Provide a 1" service lateral with a 5/8" meter for any lot greater than ½ acre.

I. Residential with second unit (as defined in the City Zoning Code Section 20-03.111 Article 6), two SFD's on one lot, and Duplexes.

1. Each unit must be served by separate meters.

2. If a new second unit is constructed and the total water flow for both units exceeds the capacity and allowable velocity of an existing 3/4" service lateral, based on the criteria established in AWWA Manual M22, the service lateral must be upsized to a 1". Otherwise, the existing lateral may be utilized.

3. If the primary unit and the second unit are to be constructed at the same time, design a 1" service lateral for the site.

4. The appropriate service lateral must be shown on the Public Improvement Plans and/or Encroachment Permit submitted for approval.

J. Multi-Family Residential (3 or more units)

1. For triplexes or lots with three PUD's, condominiums, or townhomes, individual meters are required for each unit.

2. For multi-family developments of 4-99 units, whether rental units or separate ownership units, design for an appropriately sized single master meter, a master meter for each building cluster, or individual meters for each unit.

3. For complexes of 100 units or more, metering will be designed as in (2) above, except that at least two metered connections are required if the project is to be master-metered.

4. See Section X-O for irrigation meter requirements for any landscaped or common areas.

5. All meters must be within public right-of-way or easements and multiple meters will be clustered where possible.

K. Mobile Home Parks

1. Mobile home parks that have rental spaces may have a master meter (two master meters if more than 100 spaces) or each unit may have an individual meter. Parks with individually-owned lots must have individual meters. When master meters are used, the mobile home park owner may sub-meter to the tenants at their own expense, providing they comply with P.U.C. Requirements.

2. Individual meters must be clustered and located within the public right-of-way or easement.

3. See Section X-O for common area irrigation meter requirements.

L. Mixed residential and commercial uses must have separate meters.

M. Commercial

1. See Section X-O below for irrigation requirements.

2. A minimum 1" domestic service lateral is required for commercial use.

3. Critical uses such as hospitals, jails, elderly care facilities, and others as determined by the Director of Utilities, require at least two separate water services for domestic use that must be connected to separately valved sections of the public water main.

N. Combination Services for Private Fire Service with Domestic and/or Irrigation Service

1. Only 6", 8" and 12" combination service laterals are allowed.

2. The combination service lateral must equal or exceed the size of the required fire line and must be hydraulically sized to provide adequately combined domestic, irrigation, and fire flows without exceeding allowable velocity of 15 feet per second.

3. A minimum 8" combination service lateral is required for lots with unknown commercial, multi-family, industrial and shopping centers uses where onsite hydrants are not likely to be required for development.

4. A minimum 12" combination service lateral is required for lots with unknown commercial, multi-family, industrial or shopping center uses where onsite hydrants are likely to be required for development.

O. Irrigation

1. Provide separate irrigation meters for landscaped areas of all commercial uses.

2. Provide separate irrigation meters for common areas of all condominium, townhome, PUD, apartment complexes, and mobile home parks.

3. Provide reduced pressure backflow devices for all irrigation services. Backflow devices must be specified on the irrigation plan and must conform to City Standard 876 and current USC Approved List of Devices.

4. Sizing of irrigation meters will be determined by the Utilities Department after reviewing the landscape plans. Irrigation meter size will be determined by the maximum flow required at the meter and will be based on AWWA criteria for meter sizing. Water demand purchased will be based on the estimated gallons required to maintain the planned landscape in a healthy condition for our climate. Along with landscape and irrigation plans, the applicant must submit the planned square footage of planted areas and categories of plants to be used as selected from the following:

a. High water use plants: turf, annuals, and container plants;

b. Moderate water use plants: ornamental trees, shrubs ground covers, and perennials primarily irrigated by sprinklers. (Note that there may be some use of drip or bubblers in this category but not a predominance.)

c. Low water use plants: drought tolerant plants recognized as having a plant factor of 0.3 or less and irrigated primarily through drip emitters.

XI. PUBLIC IMPROVEMENTS FOR PRIVATE FIRE SYSTEMS

A. The Utilities Department is responsible for mapping private fire systems, including hydrants, for the Fire Department and for assuring properly sized services. Design plans showing private fire systems must be submitted to the appropriate Fire and/or Building jurisdiction for approval and: 1) may be included with the Public Improvement Plans for the project; or 2) copies of the approved plans may be submitted to Utilities Engineering prior to requesting a meter set and activating the fire system.

B. Generally, the lateral size must be designed the same size or larger than the size required for the fire sprinkler system and/or the private hydrant system. **Caution** - onsite fire system design may necessitate changes to pre-approved public improvements. The hydraulic calculations for laterals serving private fire systems will be based on the required fire flow or the fire sprinkler demand, whichever is greater, combined with the peak domestic flow.

C. All private fire systems that only serve onsite hydrants require above-ground single detector check valves in accordance with Standard 888. Where above-ground installations are not reasonable due to site constraints, design for single detector check valves in vaults per Standard 879.

D. Double-check detector backflow assemblies are required for:

1. all connections serving commercial fire sprinkler systems; or

2. any property with multiple fire service connections; or

3. any fire line connections to properties with auxiliary water supply.

E. Reduced-pressure detectors are required for:

1. any fire suppression system using chemical additives such as antifreeze or fire suppressants; or

2. any building where an extreme hazard exists, as determined by the Utilities Department Water Quality Division.

F. For one- and two-family residential fire sprinkler systems:

1. Where a multipurpose system circulates water for fire sprinklers and domestic supply, no backflow device is required.

2. Where the fire system does not circulate water with the domestic supply, double-check backflow assemblies are required to protect the public water supply by either of the two methods shown on City Standard 875 and must be located in the public right-of-way or the P.U.E. adjacent to the right-of-way.

3. Where a fire sprinkler system is to be installed in a one- or two-family dwelling, design the service lateral from the street main to the water meter and the water meter to be 1" minimum. Larger size laterals and meters may be permitted where hydraulic calculations indicate the need.

G. The location of any Fire Department connection must be approved by the Fire Department.

H. Critical uses such as hospitals, jails, elderly care facilities, and others as determined by the Director of Utilities and/or the Fire Marshal, require at least two fire line service connections to separately valved sections of the public water main, so that service can be maintained in the event of a main line or service lateral shutdown.

XII. FIRE HYDRANTS

A. Generally, fire hydrants required onsite to serve one lot will be private.

B. Generally, fire hydrants required onsite to serve two or more lots will be public.

C. Design of hydrant locations must meet the Fire Code requirements and be approved by the Fire Department for logistics and by the Utilities Department for maintainability.

D. Each hydrant must be on a separately valved main line section.

E. Whenever possible, locate hydrants near street intersections.

F. If it is not possible to locate near an intersection, locate the hydrant near a property line or where it will minimize interference with property use.

G. Locate hydrants a minimum of 10' from roll down of driveways for commercial or multi-family sites and 5' from residential driveways.

H. On streets with raised medians or with four or more travel lanes, design hydrants on alternate sides of the street per current City Fire Code. Each side of the street will be considered independently relative to hydrant placement per subsections XII-J and XII-K below.

I. Residential property with one or two dwelling units - Typical locations

1. Design hydrants with a maximum of 500' spacing, or as approved by the Fire Department. Design hydrants at a maximum spacing of 300' in High Fire Severity Zones.

2. Generally, design hydrants at intersections and then evenly distribute hydrants throughout the project.

3. No one or two family dwellings may be more than 250' from the nearest hydrant or more than 150' in High Fire Severity Zones.

4. Specify "residential" hydrants per City Std. 857 on the plans.

J. Commercial, Industrial, and Multi-family (3 or more units) - Typical locations

1. Generally, design hydrants at intersections or driveway entrances and then evenly distribute hydrants throughout the project.

2. No portion of the exterior wall of the facility or building may be more than 150' from the nearest hydrant as measured by an approved route around the building per the City Fire Code.

3. Specify "commercial" hydrants per City Std. 857 on the plans.

L. Minimum fire flow required at all hydrants:

1. Fire flow as specified in the following subsections is defined as the amount of

water supply available in the water main nearest the flowing hydrant with 30 psi residual pressure, 10 psi of that residual pressure being required to overcome losses in a typical hydrant and lateral assembly at the required flow.

2. Single and two family residential uses require 1,500 gallons per minute flow, except as in subsection L-4 of this section below.

3. The required fire flows for schools, commercial, industrial, and multi-family residential (3 or more units) uses will be based on the City Fire Code. The water system will be designed so that 1,500 gpm is available from the hydraulically most demanding hydrant and the remaining flow required is available at the next most demanding hydrant(s), up to a maximum of 1,500 gpm per hydrant.

4. The minimum required fire flow in High Fire Severity Zones is 2,500 gpm for all occupancies, including one and two family residential dwellings. System design will accommodate flow apportionment as in subsection L-3 above.

5. Fire flow requirements are under the jurisdiction of the Fire Department. The guidelines given above are general. Actual flow requirements must be verified with the Fire Department prior to submittal of plans. Calculations may be required by the Fire Department to verify the adequacy of the proposed design. Mitigation measures may be required by the Fire Department if the minimum fire flow requirements cannot be met for a specific project.

XIII. BACKFLOW DEVICES (EXCEPT FOR FIRE LINES)

A. Backflow devices are required to be designed in accordance with State of California Title 17 and current City of Santa Rosa Code, Section 14-16, Backflow Regulations.

B. All backflow devices must be listed on the latest revision of the approved USC Foundation for Cross-Connection Control and Hydraulic Research list.

C. Design backflow assemblies as near as possible to the water meter as shown on Standards 874, 875 and 876.

D. Backflow preventors will be designed in accordance with Appendix "B." For uses not listed contact Utilities Engineering or Water Quality.

XIV. PRESSURE

A. To obtain water system data for these calculations, contact Utilities Engineering. A fee will be imposed if flow testing is required.

B. Mainline

1. The minimum allowable static pressure in the system is 20 psi. The maximum allowable static pressure in the system is 120 psi.

2. The maximum allowable pressure in a high-level zone is calculated by assuming the reservoir full. In the Aqueduct zone or other reduced pressure zones, calculate the pressure by using the high setting of the pressure regulating valve at the nearest aqueduct connection or system regulator.

3. The minimum allowable pressure in a high level zone is calculated by assuming the reservoir drawn down 10' from the high water level. In the Aqueduct zone or other reduced-pressure zones, use the low setting of the pressure regulating valve at the nearest aqueduct connection or system regulator.

C. Domestic service

1. The minimum allowable pressure is 20 psi measured at the meter. If pressure measured at any faucet is less than 35 psi, a pressure booster system is required.

2. The maximum allowable pressure at a meter is 120 psi. If service pressure measured at any faucet exceeds 80 psi, a private pressure regulating device is required.

XV. SPECIALTY VALVES AND WATER SAMPLING STATIONS

A. Specific locations will be reviewed for each project by Utilities Engineering.

B. Air release and vacuum relief valves are required at substantial high points in the system such as over a hilltop or at the upper end of a dead end main.

C. Design pressure reducing valves to maintain overall system balance and to maintain service pressure levels within the parameters established within these system design standards.

D. Typically surge or pressure relief valves are to be designed near the low points of any

high level pressure zone where discharge may be directed to an approved disposal system.

E. Water sampling stations are required to provide representative sampling within each pressure zone. At a minimum, one water sample station is required in each pressure zone, at each reservoir and at pump stations.

XVI. SPECIAL CONDITIONS FOR DELINEATED FAULT ZONES

A. Fault zones must be identified on improvement plans.

B. Ductile iron pipe must be indicated on the improvement plans in delineated fault zones and extend to 100' outside each side of the delineated fault boundaries.

C. Pumper connections or fire hydrants will be designed approximately 50' outside each side of the delineated fault zone. Gate valves must be designed between the fault zone and the fire hydrant/pumper connection.

D. Mechanical joint double-ball Flextend assemblies with 8" expansion/contraction capability, as manufactured by EBAA Iron, Inc. of Eastland, Texas, or approved alternative, must be designed adjacent to each side of the fault zone.

XVII. EASEMENTS

A. An easement must be provided over any public water system when it is installed outside a public right-of-way.

B. The easement must be a minimum of 15' wide if it only contains a water main or 20' wide if it contains another facility, such as sewer, storm drain, or other utility. The easement will be dedicated as a "public water easement" if it contains water only. It will be dedicated as a "public utilities easement" if it contains other facilities as well.

C. Easements must be configured to encompass all publicly maintained appurtenances, such as water service laterals, meters and fire hydrants and will be generally centered over the facility. Separate access easements may be required depending on site conditions. When water mains are to be installed along a property line the easement will be wholly contained on one parcel.

D. All property restrictions placed as a result of dedication of easements will be so noted on the Subdivision Map, or on the Easement Deed if the easement is not dedicated as part of a subdivision. Required notes are:

1. No structures may encroach on, above or below the surface of the ground in any public water easement. This includes footing of foundations or eaves from the roof of any adjacent structure, pools, ponds or outbuildings on slabs or foundations. Decks, sheds, or other structures which may be easily removed for maintenance of the water system may be allowed at the discretion of the Director of Utilities.

2. No trees may be planted in a public water easement without first obtaining approval of the Director of Utilities. Trees may be allowed to the extent that damage to the water system does not occur from root intrusion and adequate access can be provided for maintenance and repair vehicles.

XVIII. ABANDONMENT OF WATER MAINS AND SERVICES

A. Any existing water mains and service laterals that will not be used must be abandoned and must be shown on the Improvement Plans with appropriate notation.

B. For all abandoned water services up to and including 2", annotate to remove the valve and saddle and install a full circle clamp on main under Utilities Department inspection.

C. For flanged or mechanical joint tees, annotate the Improvement Plans to remove the valve and install a blind flange or mechanical joint plug under Utilities Department inspection.

D. For push-on tees, the tee, valve and concrete thrust block must be removed and the main repaired with approved pipe and suitable couplings, and so noted on the Improvement Plans.

E. Valve boxes for abandoned valves must be removed and so noted on the Improvement Plans.

F. Abandoned mains, valves and risers located within any street structural section or within any new trench must be shown on the Improvement Plans to be removed.

G. Show all 12" diameter and larger water mains to be abandoned within the public right-of-way as removed or broken every 50' and filled with sand slurry.

H. Where a fire hydrant is to be abandoned, note that the hydrant barrel, break off riser, and check valve are to be removed, the bury is to be capped or plugged, and the lateral abandoned at main as stated above. Abandonments of fire hydrants must be approved by the Fire Department.

Appendix "A"

CRITERIA FOR THE SEPARATION
OF WATER MAINS AND SANITARY SEWERS

STATE OF CALIFORNIA, Health and Human Services Agency

GRAY DAVIS, *Governor*

Department of Health Services
Drinking Water Field Operations Br anch
50 D Street, Suite 200
Santa Rosa, CA 95404-3752
(707) 576-2145 Fax: (707) 576-2722

Criteria for the Separation
of Water Mains and Sanitary Sewers
Revised April 5, 1983

A. PUBLIC HEALTH CONSIDERATIONS

Waterborne disease outbreaks attributed to the entry of sewage-contaminated groundwater into the distribution systems of public water supplies continue to be a problem in the United States. A community with its buried water mains in close proximity to sanitary sewers is vulnerable to waterborne disease outbreaks.

Sanitary sewers frequently leak and saturate the surrounding soil with sewage. This is caused primarily by structural failure of the sewer line, improperly constructed joints, and subsidence or upheaval of the soil encasing the conduit. A serious public health hazard exists when the water mains are depressurized and no pressure or negative pressures occur. The hazard is further compounded when, in the course of installing or repairing a water main, existing sewer lines are broken. Sewage spills into the excavation and, hence, enters into the water main itself. Additionally, if a water main fails in close proximity to a sewer line, the resultant failure may disturb the bedding of the sewer line and cause it to fail. in the event of an earthquake or manmade disaster, simultaneous failure of both conduits often occurs.

The water supplier is responsible for the quality of the water delivered to consumers and must take all practical steps to minimize the hazard of sewage contamination to the public water supply. Protection of the quality of the water in the public water system is best achieved by the barrier provided by the physical separation of the water mains and sewer lines.

This document sets forth the construction criteria for the installation of water mains and sewer lines to prevent contamination of the public water supplies from nearby sanitary sewers.

B. BASIC SEPARATION STANDARDS

The "California Waterworks Standards" sets forth the minimum separation requirements for water mains and sewer lines. These standards, contained in Section 64630, Title 22, California Code of Regulations, specify:

(c) (1) Parallel Construction: The horizontal distance between pressure water mains and sewer lines shall be at least 10 feet.

(2) Perpendicular Construction (Crossing): Pressure water mains shall be at least one foot above sanitary sewer lines where these lines must cross.

(d) Separation distances specified in (e) shall be measured from the nearest edges of the facilities.

(e) (2) Common Trench: Water mains and sewer lines must not be installed in the same trench.

When water mains and sanitary sewers are not adequately separated, the potential for contamination of the water supply increases. Therefore, when adequate physical separation cannot be attained an increase in the factor of safety should be provided by increasing the structural integrity of both the pipe materials and joints.

C. EXCEPTIONS TO BASIC SEPARATION STANDARDS

Local conditions, such as available space, limited slope, existing structures, etc., may create a situation where there is no alternative but to install water mains or sewer lines at a distance less than that required by the Basic Separation Standards. In such cases, alternative construction criteria as specified in Section E should be followed, subject to the special provisions in Section D.

Water mains and sewers of 24 inches diameter or greater may create special hazards because of the large volumes of flow. Therefore, installations of water mains and sewer lines 24 inches diameter or larger should be reviewed and approved by the health agency prior to construction.

D. SPECIAL PROVISIONS

1. The Basic Separation Standards are applicable under normal conditions for sewage collection lines and water distribution mains. More stringent requirements may be necessary if conditions, such as, high groundwater exist.

2. Sewer lines shall not be installed within 25 feet horizontally of a low head (5 psi or less pressure) water main.

3. New water mains and sewers shall be pressure tested where the conduits are located ten feet apart or less.

4. In the installation of water mains or sewer lines, measures should be taken to prevent or minimize disturbances of the existing line. Disturbance of the supporting base of this line could eventually result in failure of this existing pipeline.

5. Special consideration shall be given to the selection of pipe materials if corrosive conditions are likely to exist. These conditions may be due to soil type and/or the nature of the fluid conveyed in the conduit, such as a septic sewage which produces corrosive hydrogen sulfide.

6. Sewer Force Mains

   a. Sewer force mains shall not be installed within ten feet (horizontally) of a water main.

   b. When a sewer force main must cross a water line, the crossing should be as close as practical to the perpendicular. The sewer force main should be at least one foot below the water line.

   c. When a new sewer force main crosses under an existing water main, all portions of the sewer force main within ten feet Horizontally) of the water main shall be enclosed in a continuous sleeve.

   d. When a new water main crosses over an existing sewer force main, the water main shall be constructed or pipe materials with a minimum rated working pressure of 200 psi or equivalent pressure rating.

E. ALTERNATE CRITERIA FOR CONSTRUCTION

The construction criteria for sewer lines or water mains where the Basic Separation Standards cannot be attained are shown in Figures 1 and 2. There are two situations encountered:

Case 1--New sewer line--new or existing water main.

Case 2--New water main--existing sewer line.

For case 1, the alternate construction criteria apply to the sewer line.

For Case 2, the alternate construction criteria may apply to either or both the water main and sewer line.

The construction criteria should apply to the house laterals that cross above a pressure water main but not to those house laterals that cross below a pressure water main.

Case 1: New Sewer Being Installed (Figures 1 and 2)

Zone	Special Construction Required for Sewer
A	Sewer lines parallel to water mains shall not be permitted in this zone without approval from the responsible health agency and water supplier.
B	A sewer line placed parallel to a water line shall be constructed of:

1. Extra strength vitrified clay pipe with compression joints.
2. Class 4000, Type II, asbestos-cement pipe with rubber gasket joints.
3. Plastic sewer pipe with rubber ring joints (per ASTM D3034) or equivalent.
4. Cast or ductile iron pipe with compression joints.
5. Reinforced concrete pressure pipe with compression joints (per AWWA C302-74).

C A sewer line crossing over a water main shall be constructed of:

1. Ductile iron pipe with hot dip bituminous coating and mechanical joints.
2. A continuous section of Class 200 (DR 14 per AWWA C900) plastic pipe or equivalent, centered over the pipe being crossed.
3. A continuous section of reinforced concrete pressure pipe (per AWWA C302-74) centered over the pipe being crossed.
4. Any sewer pipe within a continuous sleeve.

D A sewer line crossing under a water main shall be constructed of:

1. A continuous section of ductile iron pipe with hot dip bituminous coating.
2. A continuous section of Class 200 QR 14 per AWWA C900) plastic pipe or equivalent, centered on the pipe being crossed.

3. A continuous section of reinforced concrete pressure pipe (per AWWA C302-74) centered on the pipe being crossed.

4. Any sewer pipe within a continuous sleeve.

5. Any sewer pipe separated by a ten-foot by ten-foot, four-inch thick reinforced concrete slab.

Case 2: New Water Mains Being Installed (Figures 1 and 2)

Zone	Special Construction Required for Water Mains
A	No water mains parallel to sewers shall be constructed without approval from the health agency.
B	If the sewer paralleling the water main does not meet the Case 1, Zone B, requirements, the water main shall be constructed of:

1. Ductile iron pipe with hot dip bituminous coating.

2. Dipped and wrapped one-fourth-inch-thick welded steel pipe.

3. Class 200, Type II, asbestos-cement pressure pipe.

4. Class 200 pressure rated plastic water pipe QR 14 per AWWA C900) or equivalent.

5. Reinforced concrete pressure pipe, steel cylinder type, per AWWA (C300-74 or C301-79 or C303-70).

C If the sewer crossing over the water main does not meet the Case 1, Zone C, requirements, the water main shall have no joints in Zone C and be constructed of:

1. Ductile iron pipe with hot dip bituminous coating.

2. Dipped and wrapped one-fourth-inch-thick welded steel pipe.

3. Class 200 pressure rated plastic water pipe (DR 14 per AWWA C900) or equivalent.

4. Reinforced concrete pressure pipe, steel cylinder type, per AWWA (C300-74 or C301-79 or C303-70).

D If the sewer crossing under the water main does not meet the requirements for Zone D, Case 1, the water main shall have no joints within four feet from either side of the sewer and shall be constructed of:

1. Ductile iron pipe with hot dip bituminous coating.

2. Dipped and wrapped one-fourth-inch-Thick welded steel pipe.

3. Class 200 pressure rated plastic water pipe (DR 14 per AWWA C900) or equivalent.

4. Reinforced concrete pressure pipe, steel cylinder type, per AWWA (C300-74 or C302-79 or C303-70).

NOTES AND DEFINITIONS:

1. Health Agency -- The Department of Health Services. For those water systems supplying fewer than 200 service connections, the local health officer shall act for the Department of Health Services if it has been delegated authority to conduct the small water system regulatory program.

2. Water Supplier -- "Person operating a public water system" or "supplier of water" means any person who owns or operates a public water system.

3. Low Head Water Main -- Any water main which has a pressure of five psi or less at any time at any point in the main.

4. Dimensions are from outside of water main to outside of sewer line or manhole.

5. Compression Joint -- A push-on joint that seals by means of the compression of a rubber ring or gasket between the pipe and a bell or coupling.

6. Mechanical Joints -- Bolted joints.

7. Rated working water pressure or pressure class -- A pipe classification system based upon internal working pressure of the fluid in the pipe, type of pipe material, and the thickness of the pipe wall.

8. Fused Joint -- The jointing of sections of pipe using thermal or chemical bonding processes.

9. Sleeve -- A protective tube of steel with a wall thickness of not less than one-fourth inch into which a pipe is inserted.

10. Ground Water -- Subsurface water found in the saturation zone.

11. House Lateral -- A sewer connecting the building drain and the main sewer line.

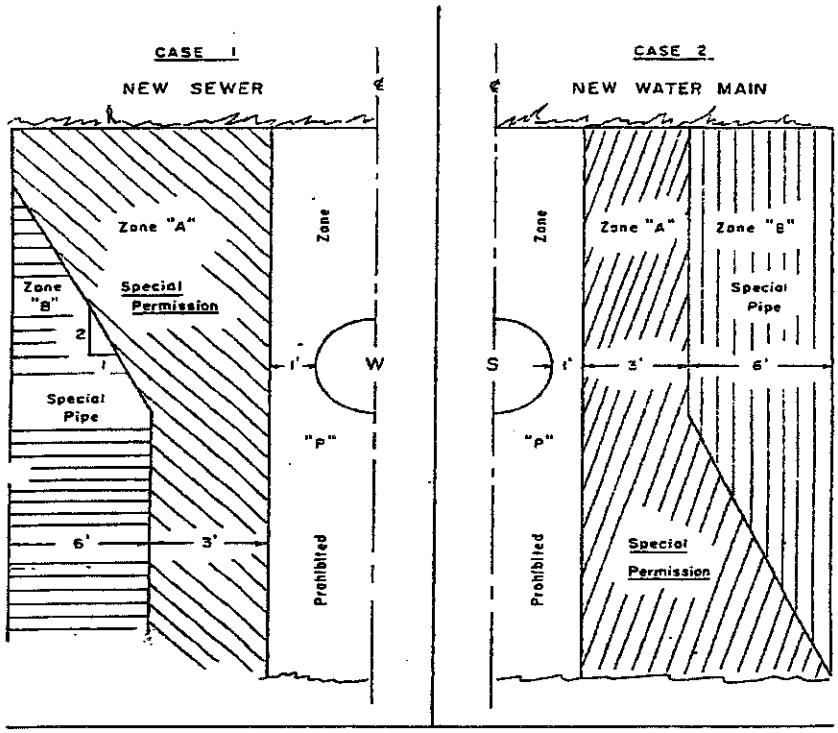

Note: Zones identical on either side of center lines.
Zone "P" is a prohibited zone, Section 64630 (e) (2) California Administrative Code, Title 22

Figure 1 - PARALLEL CONSTRUCTION

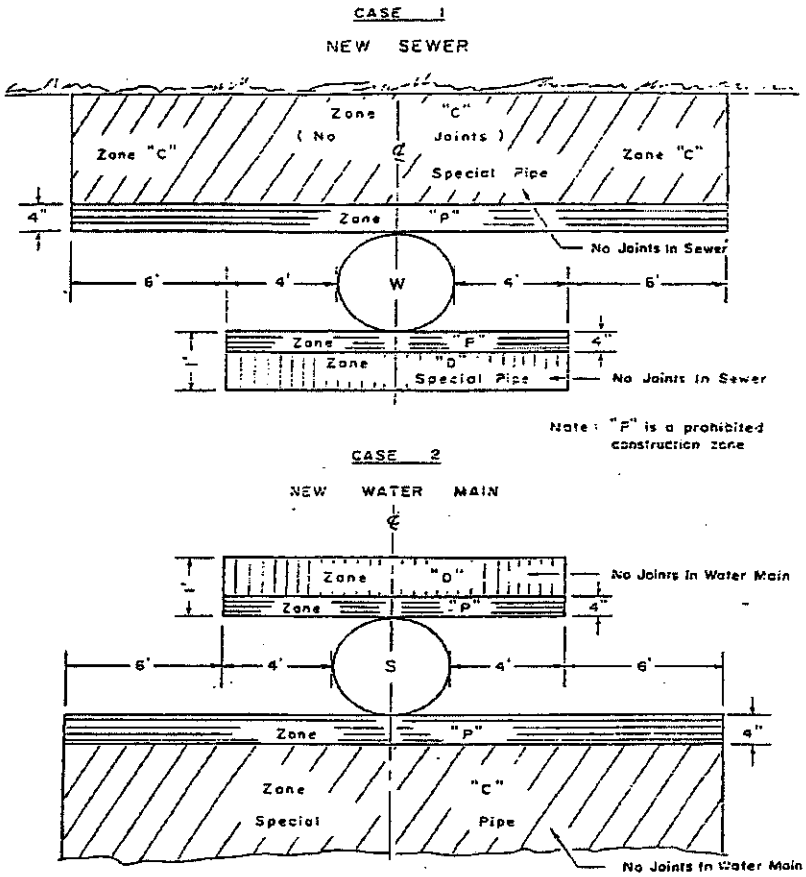

Figure 2 — CROSSINGS

Appendix "B"

BACKFLOW DEVICE REQUIREMENTS FOR SPECIFIC TYPES OF USE

BACKFLOW DEVICE REQUIREMENTS

APPLICATION	TYPE OF DEVICE
Auto Sales, Painting, Repair, Radiator work	RP
Auxiliary Water Supply (Contaminated Wells, etc.)	RP
Auxiliary Water Supply	DC
Auxiliary Water Supply (with 2 or more City Water Connections to Site)	DC/RP
Barber Shops	RP
Blood Banks	RP
Boiler Systems (any)	RP
Buildings with Booster Systems	DC
Buildings with 3 or more Stories or with fixtures 30 feet above the service	RP
Buildings with Sewage Ejectors	AG/RP
Buildings with Storage Tanks	DC/RP
Homes with Sewage Lift Stations	RP
Car Wash	AG/RP
Cement, concrete, Sand & Gravel Plants	RP
Chemical Storage or Processing Facilities	AG/RP
Dairy or Cold Storage	RP
Film Processing	RP
Fire Systems - Business/Residential (sprinklers with or without hydrants)	DC w/Det.Ck.
Fire Systems - w/Sprinkler in Hazardous Locations	AG/RP
Gas Stations	RP
Gray Water System	RP
Heating & Air Conditioning (Using Water)	RP
Hospital or Medical Facility (any) Convalescent or Long Term Care	RP
Irrigation Systems	RP

Irrigation System w/Chemical Feed	RP
Laboratories (Commercial or Research)	AG/RP
Laundry or Dry Cleaner	RP
Manufacturing or Processing (with Toxic Chemicals)	AG/RP
Medical or Dental Facility (any)	RP
Mobile Home Park	DC
Ornamental Pools, Ponds or Fountains	RP
Painting Auto Shops	RP
Printing Shops	RP
Radiator Shops (all)	RP
Radioactive Materials	AG/RP
Restaurant	RP/DC
Restricted or Classified Facilities	AG/RP
Schools	RP
Sewage or Storm Drain Facilities	AG
Spray Rigs (all types)	AG
Steam Cleaning Equipment (any type)	RP
Steam Generation	AG/RP
Swimming Pools (Public and Commercial)	RP
Tank Trucks or Chemical Spray Rigs	AG
Veterinary Clinics	RP
Warehousing & Storage	DC/RP
AG = Air Gap DC = Double Check RP = Reduced Pressure DC w/Det. Ck. = w/Detector Check	

U:\Eng\STANDARDS\WATERDESIGN9-2002.wpd

2. WATER DISTRIBUTION SYSTEM STANDARD DRAWINGS

Std. #	Title	Approved
850	DELETED (see Design Standards)	
851	Harness Installation For Flange Fittings	Sept. 2002
852	Harness Installation	Sept. 2002
853	Concrete Anchor Blocks For Vertical Bends	Sept. 2002
854	Concrete Thrust Blocks For Horizontal Bends	Sept. 2002
855	Water Main Lowering	Sept. 2002
856	Water Main Over Structure	Sept. 2002
857	Fire Hydrant and Lateral / Fire Hydrant Location, 2 sheet	Sept. 2002
858	Pumper Connection	Sept. 2002
859	Temporary Blow-Off and/or Metered Connection	Sept. 2002
860	Temporary Metered Connection When Fire Flow is Required	Sept. 2002
861	Blow-Off With Harness	Sept. 2002
862	Full Size Blow-Off	Sept. 2002
863	3/4" & 1" Water Service Lateral	Sept. 2002
864	1" Dual Water Service Lateral	Sept. 2002
865	2" Water Service Lateral For 2" or 1 ½" Meter	Sept. 2002
866	4" Water Service Lateral For 3" Meter	Sept. 2002
867	4" Water Service Lateral For 4" Meter	Sept. 2002
868	6" Water Service Lateral For 6" Meter	Sept. 2002
869	Combination Water Service Stub	Sept. 2002
870	Combination Water Service	Sept. 2002
871	Alignment of Water Mains & Placement of Mainline Valves	Sept. 2002
872	Dirt Stop & Water Main Encasement	Sept. 2002
873	DELETED	
874	Above Ground Double-Check Valve Backflow Device	Sept. 2002
875	Below Ground Double-Check Valve Backflow Device	Sept. 2002
876	Reduced-Pressure Backflow Device	Sept. 2002
877	Gate Valve	Sept. 2002
878	Butterfly Valve And Tapping Valve	Sept. 2002
879	Single Check Detector In Vault - 3 Sheets	Sept. 2002
880	Double Check Detector Fireline Backflow Assembly	Sept. 2002
881	Pressure Reducing Valves	Sept. 2002
882	Surge Anticipator Valve or Pressure Relief Valve	Sept. 2002
883	Air & Vacuum / Air Release Valve	Sept. 2002
884	Water Meter for Private Non-residential Systems	Sept. 2002
885	Water Meter for Private Process and Evaporative Water Lines	Sept. 2002
886	Water Sampling Station	Sept. 2002
887	4" Ductile Iron Multi-Service Manifold	Sept. 2002
888	Above Ground Single Detector Check Assembly	Sept. 2002
889	Water Service Anode	Sept. 2002

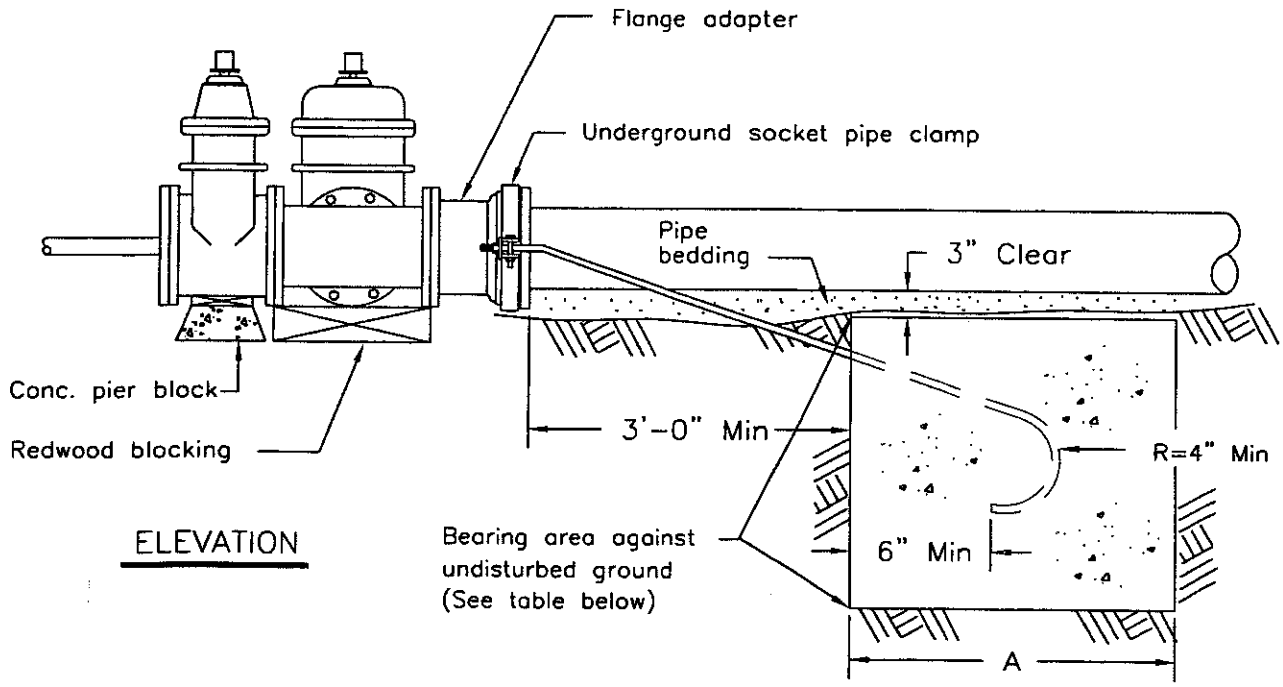

ELEVATION

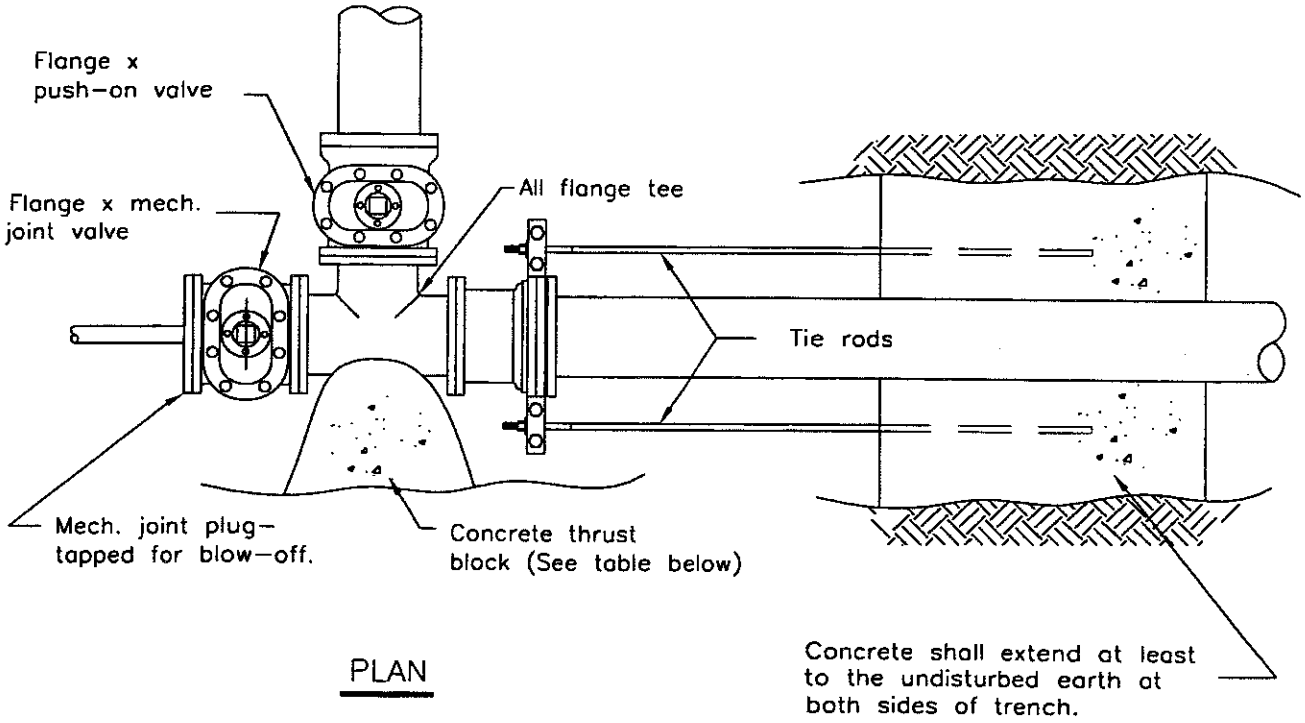

PLAN

MINIMUM DIMENSIONS				
PIPE SIZE	TIE RODS	HARNESS BLOCK*	A	THRUST BLOCK**
6"	5/8"	4 Sq. Ft.	2'	4 Sq. Ft.
8"	3/4"	7 Sq. Ft.	3'	7 Sq. Ft.
12"	1-1/8"	15 Sq. Ft.	3'	15 Sq. Ft.
OVER 12" BY DESIGN ENGINEER				

* Bearing area below grade of pipe against undisturbed ground.
** Bearing area against undisturbed ground.

CITY OF SANTA ROSA

HARNESS INSTALLATION for FLANGE FITTINGS

SCALE: NONE | DATE: Sept.2002

DWN: W.H. | APPROVED | FILE NO.

CHK: G.C. | STD.- 851

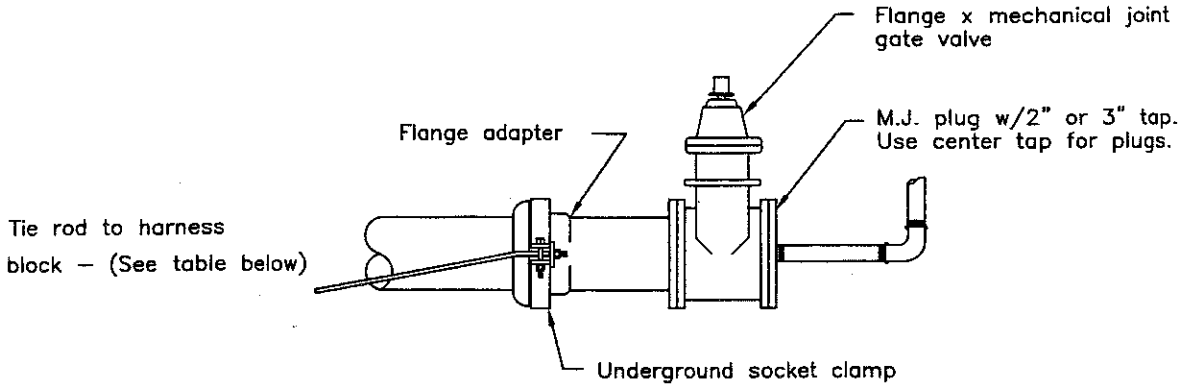

HARNESS FOR VALVE WITH PLUG

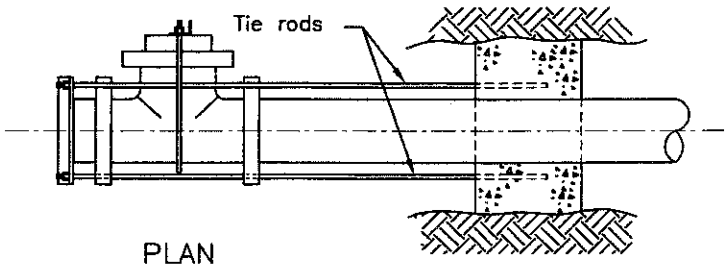

PLAN

Concrete shall extend at least to the undisturbed earth at both sides of trench

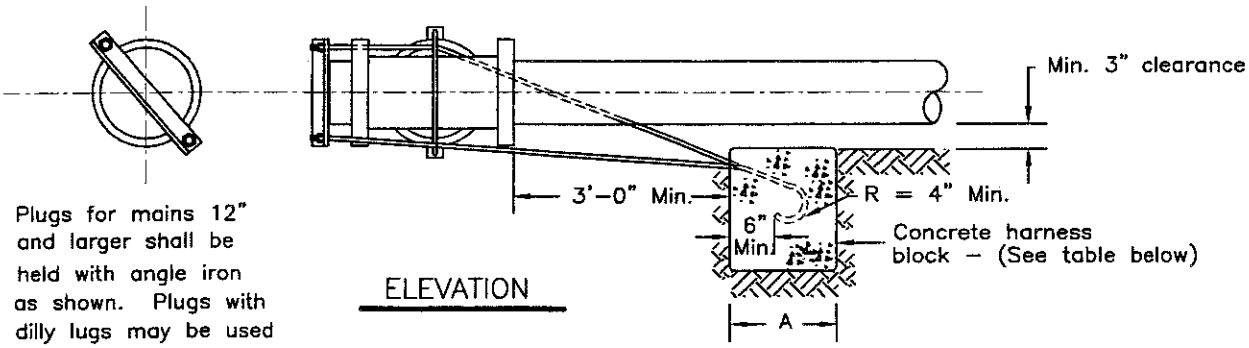

Plugs for mains 12" and larger shall be held with angle iron as shown. Plugs with dilly lugs may be used on 6" & 8" mains

ELEVATION

TYPICAL HARNESS

MINIMUM DIMENSIONS				
PIPE SIZE	TIE RODS	ANGLE IRON	* HARNESS BLOCK	A
6"	5/8"	3"x3"x1/4"	4 Sq. Ft.	2'
8"	3/4"	3 1/2"x3"x1/4"	7 Sq. Ft.	3'
12"	1 1/8"	4"x3"x1/2"	15 Sq. Ft.	3'
OVER 12" BY THE DESIGN ENGINEER				

* Bearing area below grade of pipe against undisturbed ground

CITY OF SANTA ROSA		
HARNESS INSTALLATION		
SCALE: NONE	DATE: Sept.2002	
DWN: GC CHK:	APPROVED	FILE NO. STD.– 852

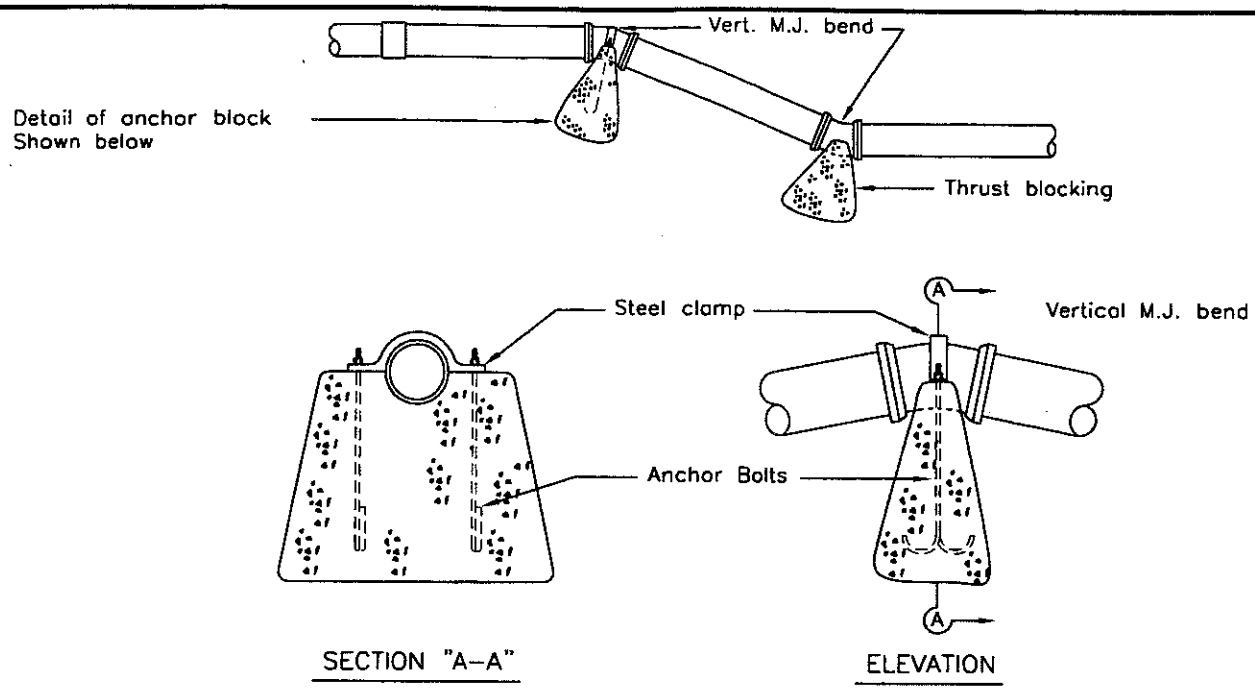

TYPICAL CONCRETE ANCHOR BLOCK FOR VERTICAL BEND

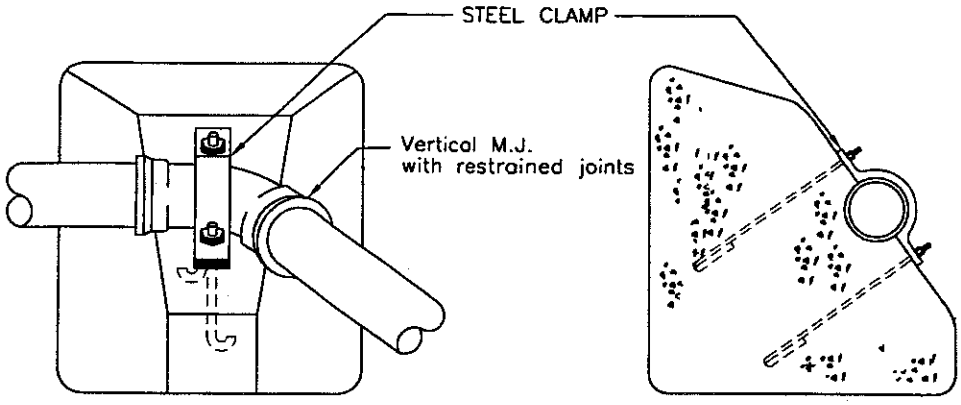

TYPICAL CONCRETE ANCHOR BLOCK FOR COMBINATION

HORIZONTAL – VERTICAL BEND

NOTES:

1. Concrete anchor blocks shall be installed by the Contractor to withstand a thrust produced by the test pressure plus 50 p.s.i. Minimum dimensions for anchor bolts and clamps are listed in table below.
2. Use mechanical restrained joints at all fittings.

PIPE SIZE	ANCHOR BOLTS	STEEL CLAMPS
6"	5/8"	3" X 1/4"
8"	3/4"	3–1/4"x1/4"
12"	1–1/8"	4" x 1/2"

For pipes greater than 12", design Engineer must submit calcs. To size anchor bolts & clamps.

CITY OF SANTA ROSA	
CONCRETE ANCHOR BOLTS for VERTICAL BENDS	
SCALE: NONE	DATE: Sept.2002
DWN: GC CHK:	APPROVED FILE NO. STD.- 853

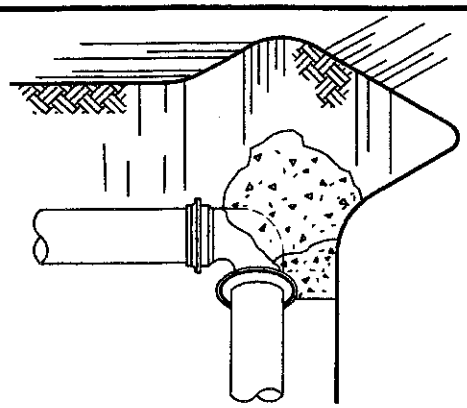

BEND
TYPICAL CONC. BLOCKING
SHOWN IN PERSPECTIVE.

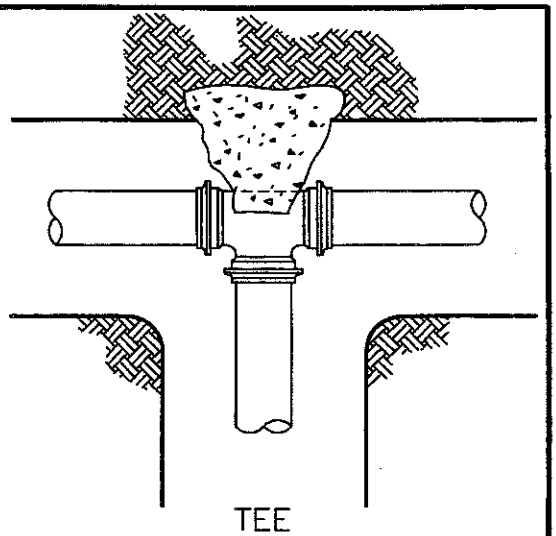

TEE

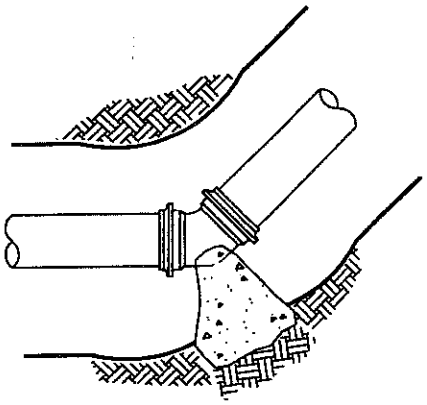

TYPICAL BEND

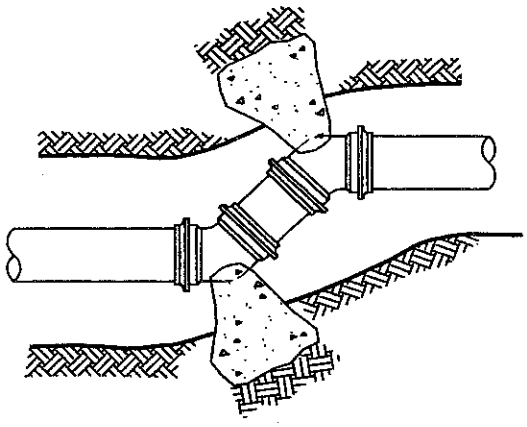

OFFSET

NOTES:

1. Safe bearing load of soil for horizontal thrust shall not be exceeded.
2. Concrete blocking, cast–in–place, to extend from bells of fittings to undisturbed soil and entire bearing area must be against undisturbed soil.
3. In using the Thrust Blocking Table below, assume 2000 P.S.F. bearing capacity unless otherwise shown on the plans. The Design Engineer shall specify thrust blocking requirements for all other soil bearing conditions.
4. For plugged leg(s) of tee or cross use harness type blocking as shown on STD. 852 and concrete blocking indicated in table below.

MIN. REQ'D BEARING AREA IN SQ. FT. PER 100 P.S.I. TEST PRESSURE*					
PIPE SIZE	SOIL BEARING CAPACITY(PSF)	TEES & DEAD ENDS	90° BENDS	45° BENDS	22–1/2° BENDS
6"	1000	4	6	3	2
	2000	2	3	2	1
8"	1000	7	10	5	3
	2000	4	5	3	2
12"	1000	16	22	12	6
	2000	8	11	6	3

* MULTIPLY NO. IN TABLE BY TEST PRESSURE & DIVIDE BY 100

For pipes greater than 12", Design Engineer must submit calculations to size concrete thrust blocks.

CITY OF SANTA ROSA

CONCRETE THRUST BLOCKS for HORIZONTAL BENDS

SCALE: NONE | DATE: Sept.2002

DWN: GC | APPROVED | FILE NO.

CHK: | STD.– 854

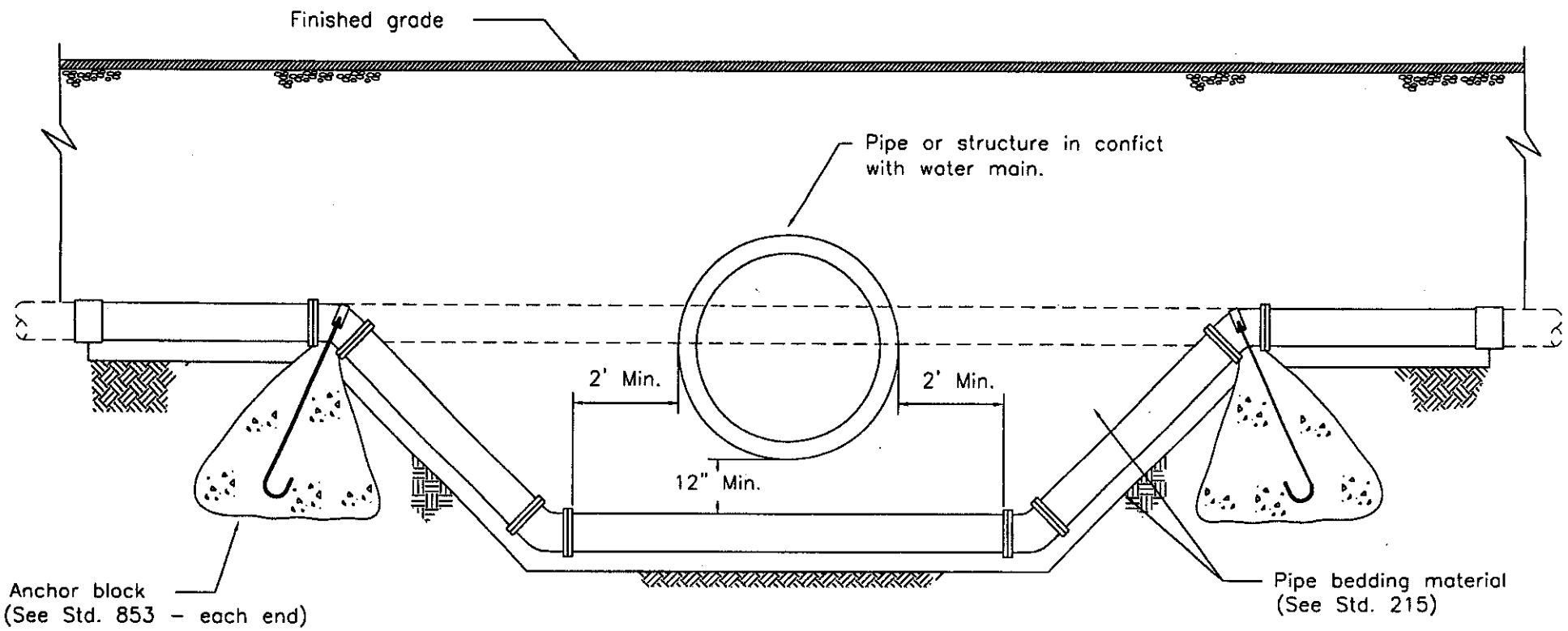

NOTES:

1. All pipe and fittings shall be ductile iron & shall be wrapped in polyethylene – per City of Santa Rosa Std. Construction Specifications.

2. Only mechanical joint fittings with restrained joints may be used.

3. All bends shall be 45° or 22-1/2° fittings.

CITY OF SANTA ROSA	
WATER MAIN LOWERING	
SCALE: NONE	DATE: Sept.2002
DWN: GC	APPROVED
CHK:	FILE NO. STD.-855

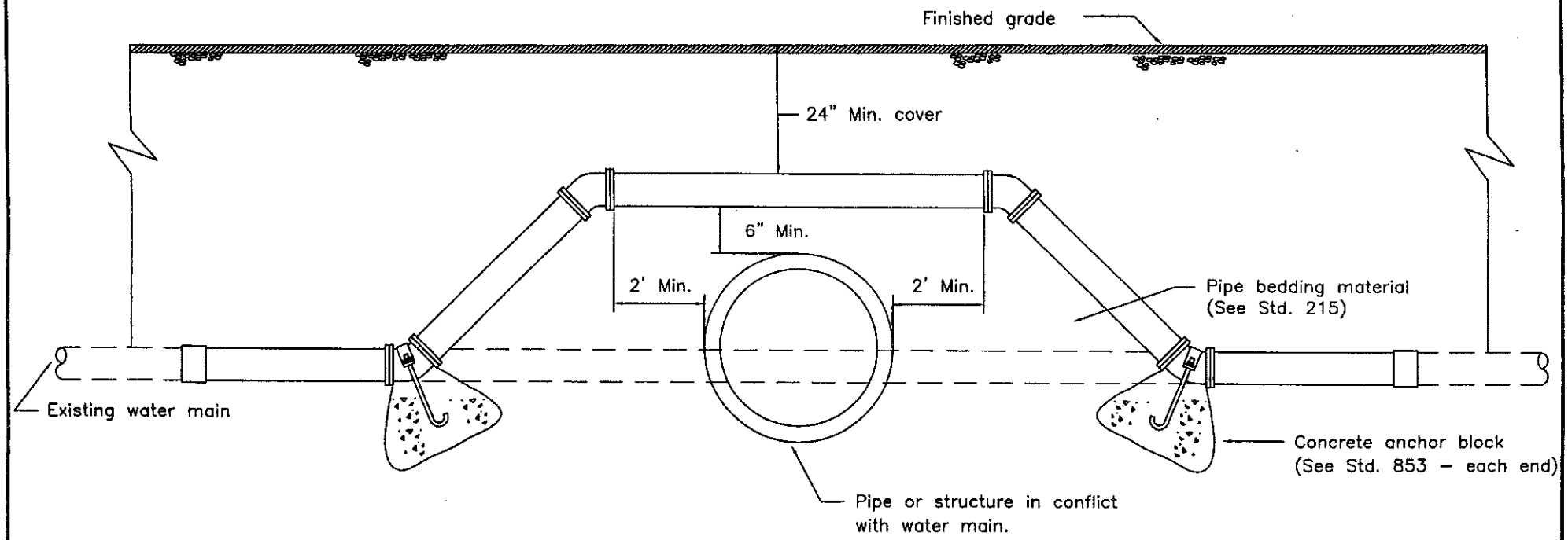

NOTES:

1. All pipe and fittings shall be ductile iron & shall be wrapped in polyethylene per City of Santa Rosa Std. Construction Specifications.
2. Only mechanical joint fittings with restrained joints may be used.
3. All bends shall be 45° or 22-1/2° fittings. – No 90° bends allowed.
4. To be used only at the direct approval of the Director of Utilities.

CITY OF SANTA ROSA	
WATER MAIN OVER STRUCTURE	
SCALE: NONE	DATE: Sept.2002
DWN: GC	APPROVED
CHK:	FILE NO. STD.-856

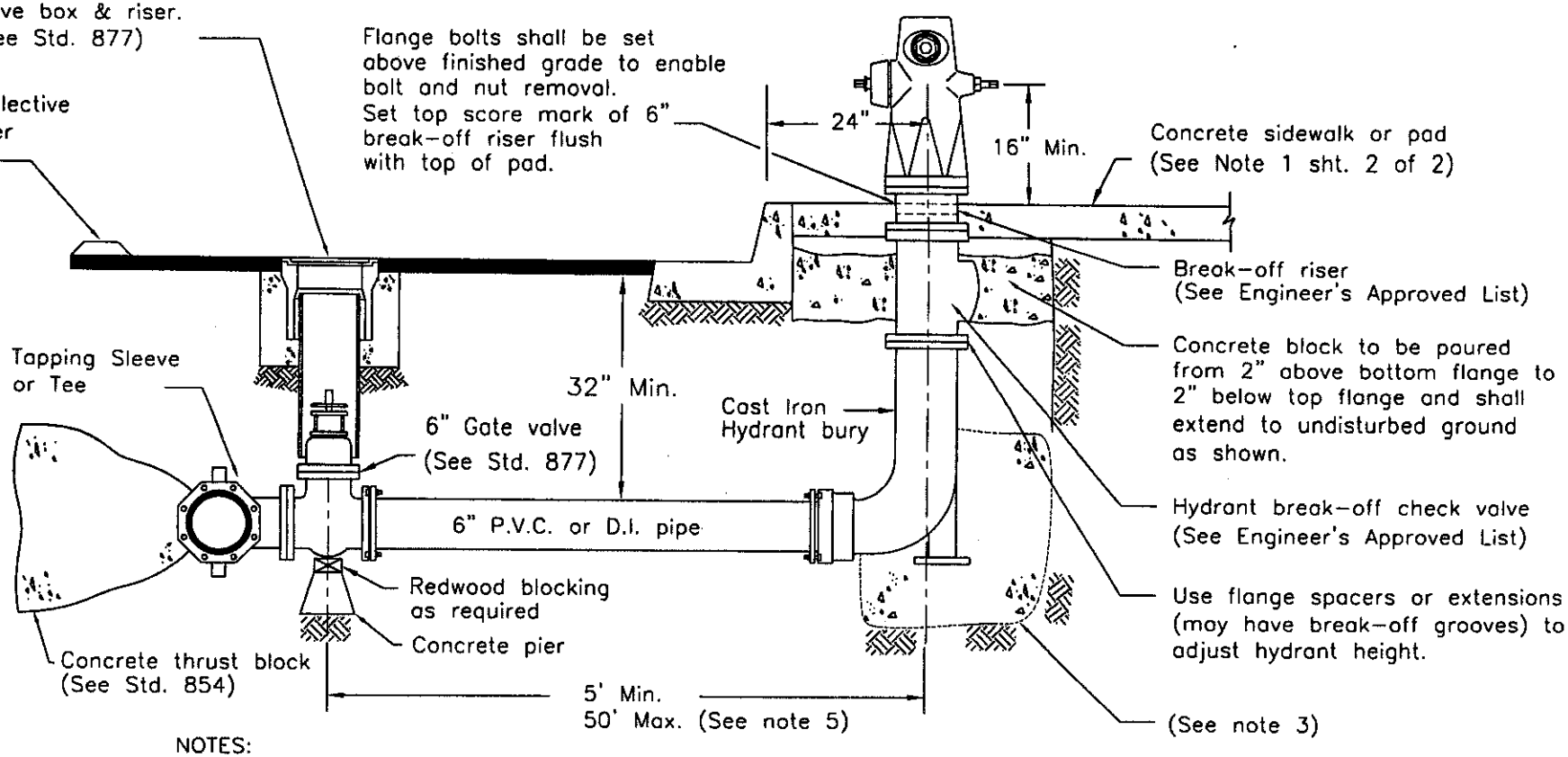

NOTES:

1. Residential fire hydrants have one 2-1/2" & one 4-1/2" outlets. Commercial fire hydrants have one 2-1/2" & two 4-1/2" outlets.
2. Paint fire hydrant in accordance with AWWA Standard Specification C503. (See Engineer's Approved List) The finished paint color shall be white. All damaged paint surfaces shall be corrected by touch up prior to acceptance.
3. Restrained joints are required for all new construction from gate valve to hydrant bury. Thrust blocks are only required where existing services are being modified and restrained joints are not used.
4. Blue reflective pavement markers should be placed 6 inches from the centerline stripe, or approximate center of the pavement where there is no centerline stripe, on the side nearest the fire hydrant.
5. If hydrant lateral length exceeds 50 feet, contact Utilities Engineering.

APPROVED HYDRANTS

(See Engineer's Approved List)

CITY OF SANTA ROSA

FIRE HYDRANT
and LATERAL

SCALE: NONE | DATE: Sept.2002

DWN: WH | APPROVED

CHK: G.C. | FILE NO.

STD.-857

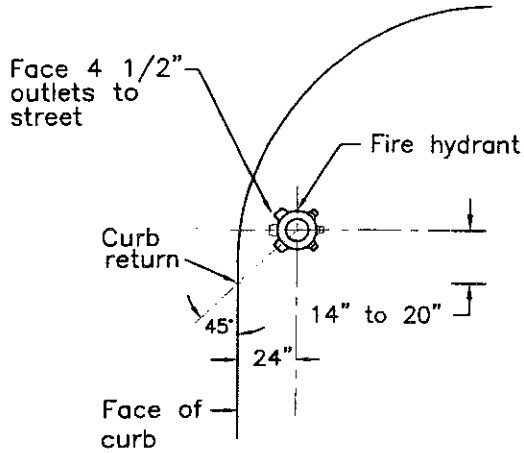

CURB RETURN

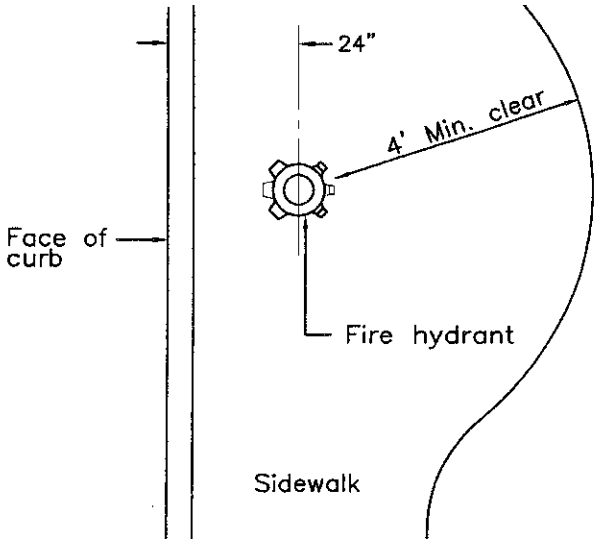

CONTIGUOUS SIDEWALK

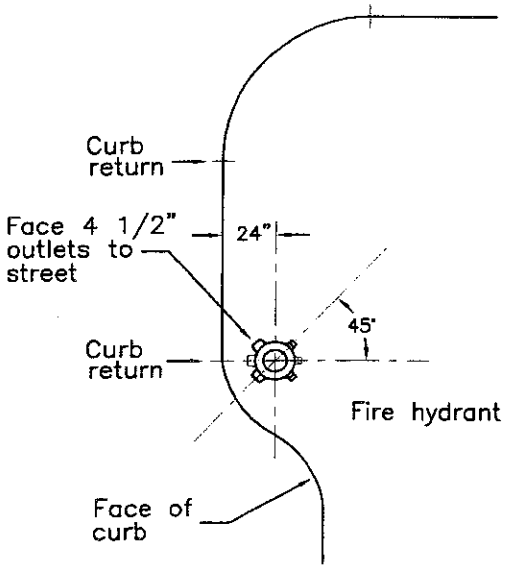

CURB RETURN
WITH NECKDOWN

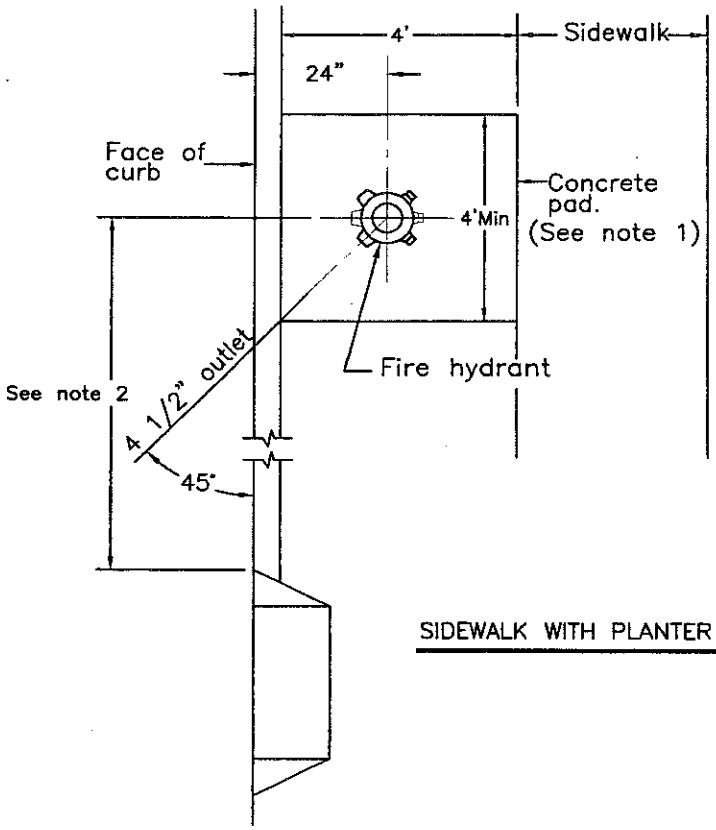

SIDEWALK WITH PLANTER STRIP

NOTES:

1. Where no sidewalk exists, or where hydrant is installed in planter strip, a 4" thick 4' x 4' concrete pad shall be installed.

2. Hydrants to be a minimum of 10 feet from driveway approach in commercial or multi-family developments and a minimum of 5 feet from driveway approach in one or two family developments.

CITY OF SANTA ROSA	
FIRE HYDRANT LOCATION	
SCALE: NONE	DATE: Sept.2002
DWN: GC CHK:	APPROVED
	FILE NO. STD.- 857

APPROVED HYDRANTS
(See Engineer's Approved List)

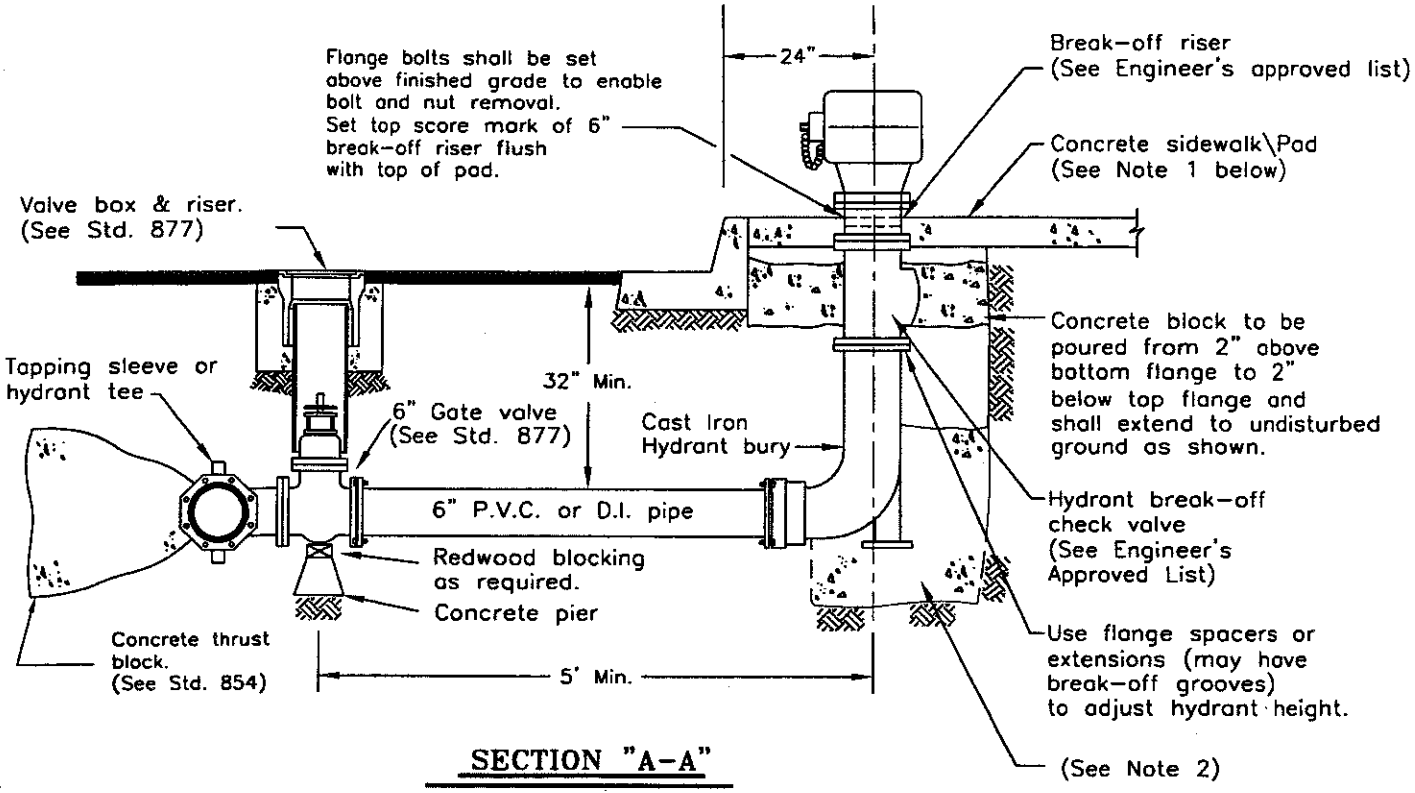

SECTION "A-A"

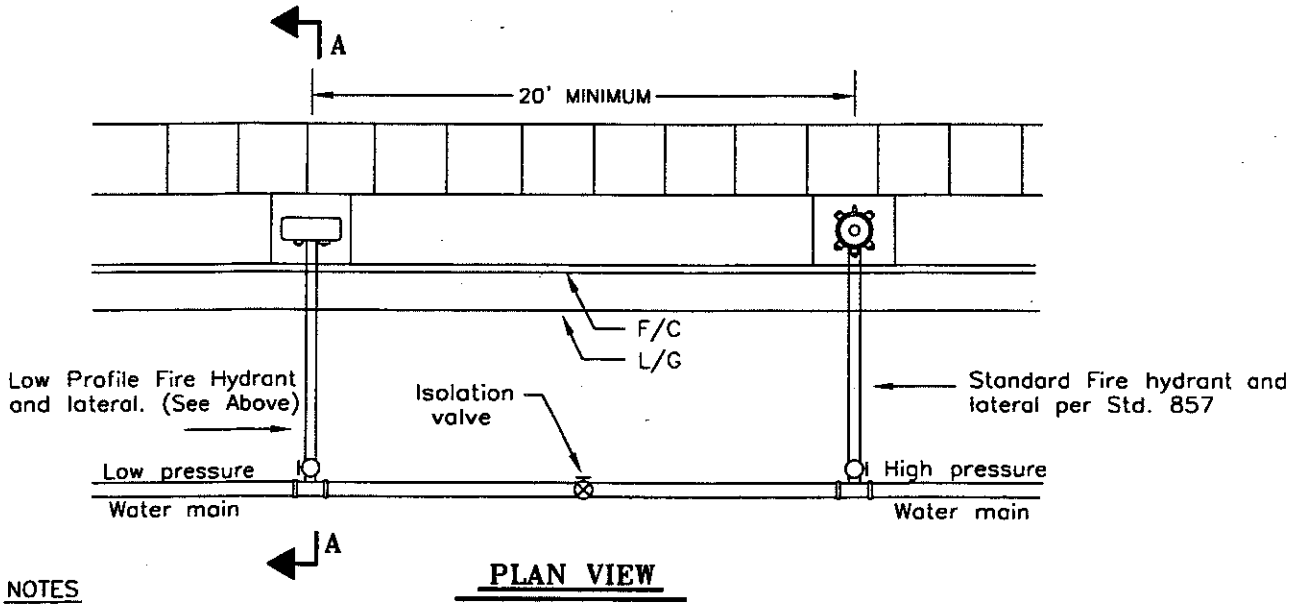

PLAN VIEW

NOTES

1. Where no sidewalk exists, or where hydrant is installed in planter strip, a 4" thick 4' x 4' concrete pad shall be installed around the base of the hydrant.
2. Restrained joints are required for all new construction from gate valve to hydrant bury. Thrust blocks are only required where existing services are being modified and restrained joints are not used.
3. Install min. of 10' from commercial or multi-family driveways and 5' from one or two family driveways.
4. Paint fire hydrant in accordance with AWWA Standard Specification C503. (See Engineer's Approved List) The finished paint color shall be white. All damaged paint surfaces shall be corrected by touch up prior to acceptance.

CITY OF SANTA ROSA	
PUMPER CONNECTION	
SCALE: NONE	DATE: Sept.2002
DWN: TBM / CHK: RLH	APPROVED / FILE NO. STD.- 858

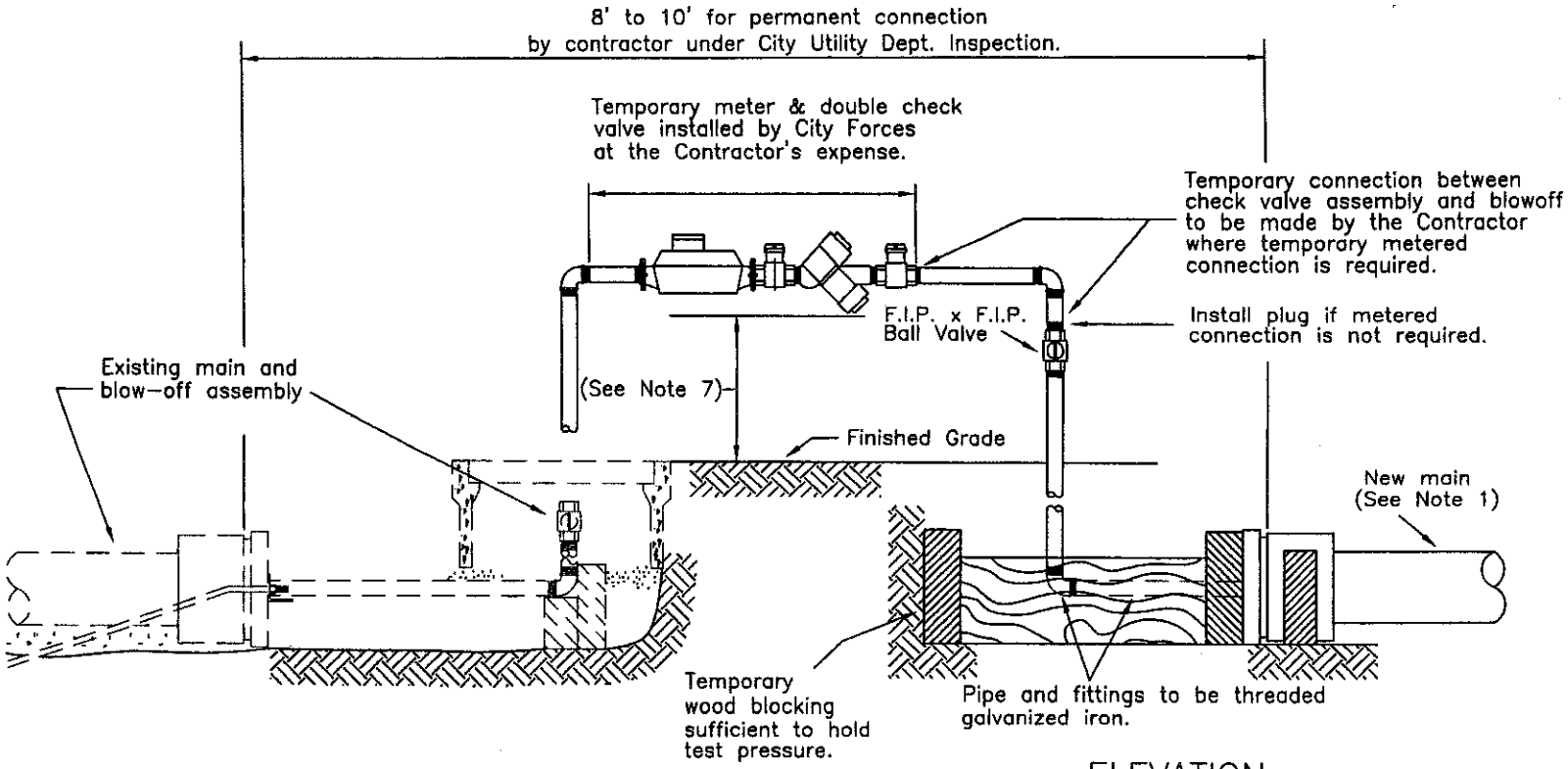

ELEVATION

NOTES:

1. End of new main to be on same line and grade as existing where feasible.
2. Wood blocking to be used for thrust produced by test pressure plus 50 P.S.I.
3. Safe bearing load of soil for horizontal thrust shall not be exceeded.
4. See Std. 861 for blowoff size chart. ("Blowoff" is pipe and fittings, up to and including valve.)
5. The Contractor shall make the final tie-in under the inspection of a City Utilities Dept. representative. Inspection fees must be paid prior to scheduling tie-in.
6. Should the blowoff on the existing main be located out of the traveled way as indicated on Std. 861, the temporary blowoff piping shall be extended out of the traveled way and the risers, meter, and check valve will be installed out of the traveled way.
7. Clearance to be 12" min. above finished grade or 6" above the inundation level, whichever is higher.
8. This installation is not acceptable when combustible material is stored on site or construction above grade begins. (See Standard 860 when fire flow is required).

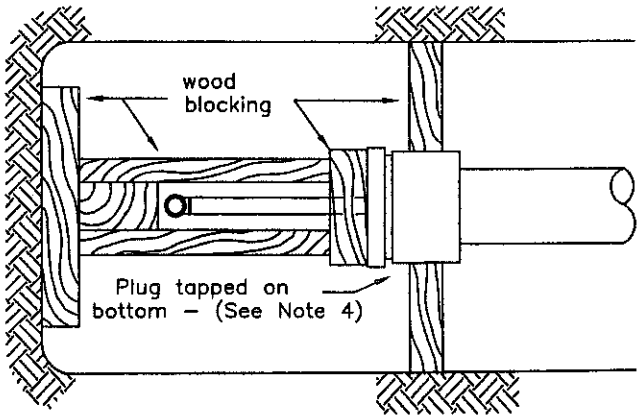

PLAN

CITY OF SANTA ROSA

TEMPORARY BLOWOFF AND/OR
METERED CONNECTION FOR
MAINS UNDER CONSTRUCTION

SCALE: NONE | DATE: Sept.2002
APPROVED
DWN: GC
CHK:
FILE NO.
STD.- 859

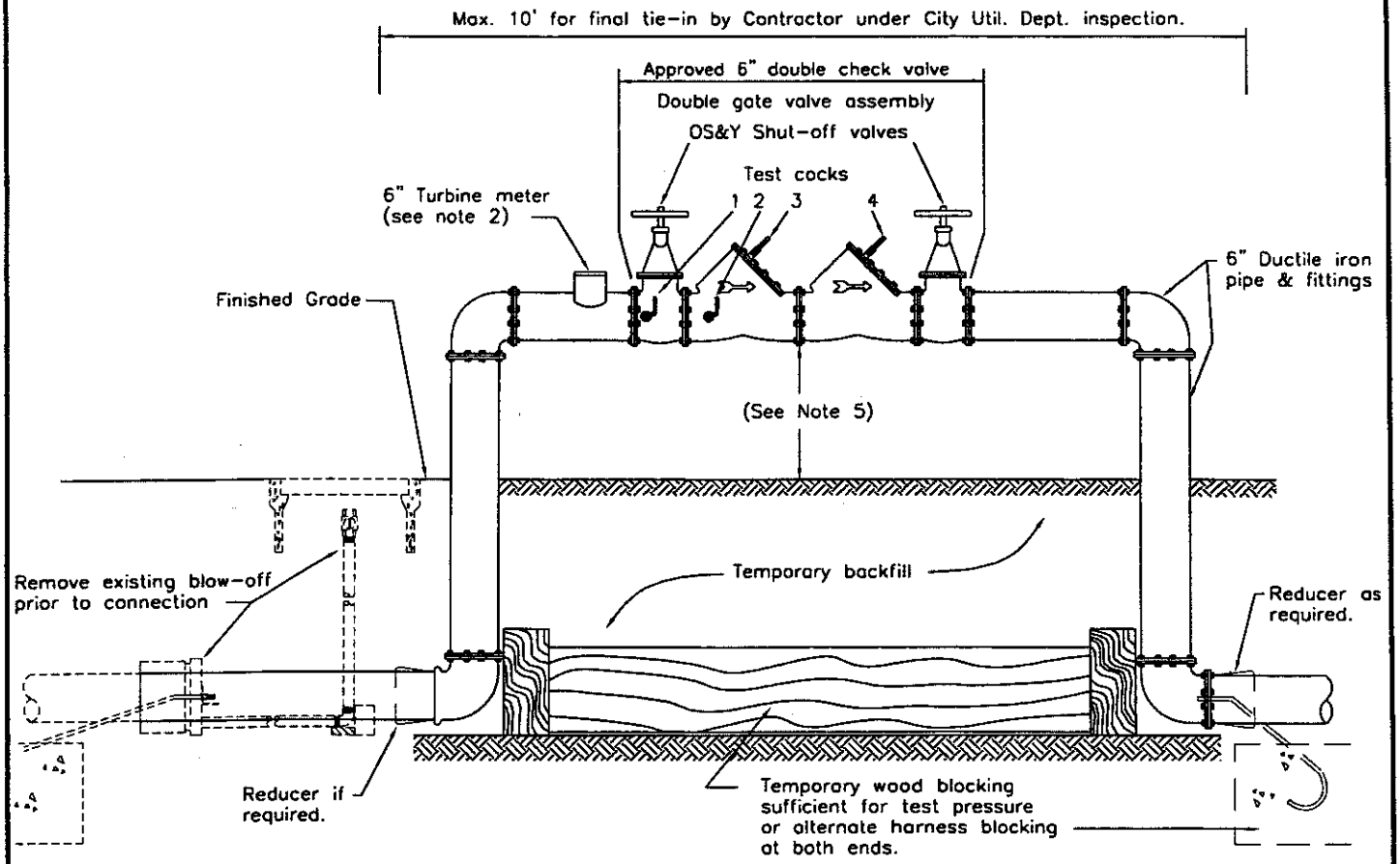

NOTES:

1. This assembly shall be installed when combustible materials will be stored or constructed on-site prior to acceptance of the on-site water main by the City. Fire flow & access must be satisfactory to the City Fire Department.

2. The Contractor shall furnish the 6" meter and have the 6" meter and double check valve tested and certified on-site by the Water Utility prior to activating the system. The contractor is responsible for any fees and charges incurred.

3. The Contractor shall make final tie-in under the inspection of a City Utilities Department representative. Inspection fees must be paid prior to scheduling tie-in.

4. Meters to be gallon reading type only.

5. Clearance to be 12" min. above finished grade or 6" above the inundation level, whichever is higher.

6. Fire lines shall be flushed per City Standard Specifications and adequate fire flow provided prior to combustible materials being stored or construction beginning on site.

CITY OF SANTA ROSA		
TEMPORARY METERED CONNECTION WHEN FIRE FLOW IS REQUIRED		
SCALE: NONE	DATE: Sept.2002	
DWN: GC CHK:	APPROVED	FILE NO. STD.- 860

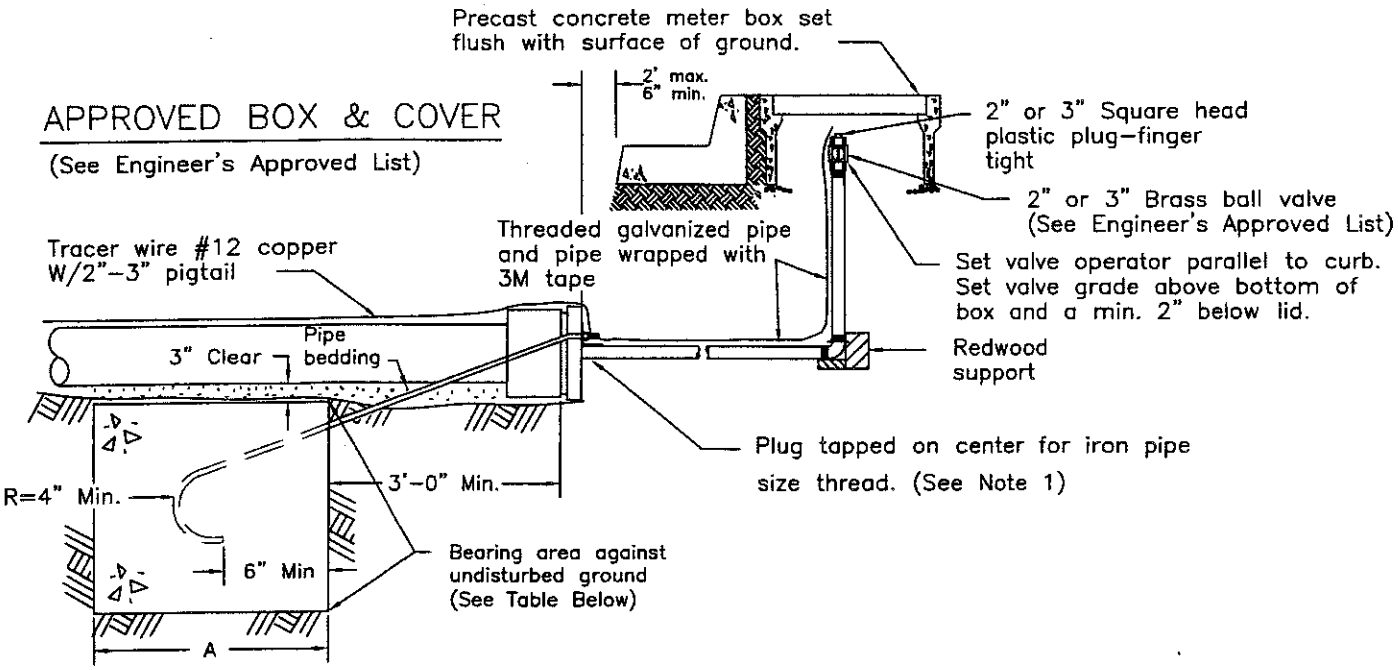

ELEVATION

NOTES

1. For 6" & 8" mains, M.J. plugs or caps with dilly lugs and 2" center tap may be used in lieu of angle iron. Install angle iron off–center to accomodate center tap.

2. Blow–off shall not be installed within the traveled way. If main ends within street area, blow–off to be extended to area outside of traveled way and installed as shown above.

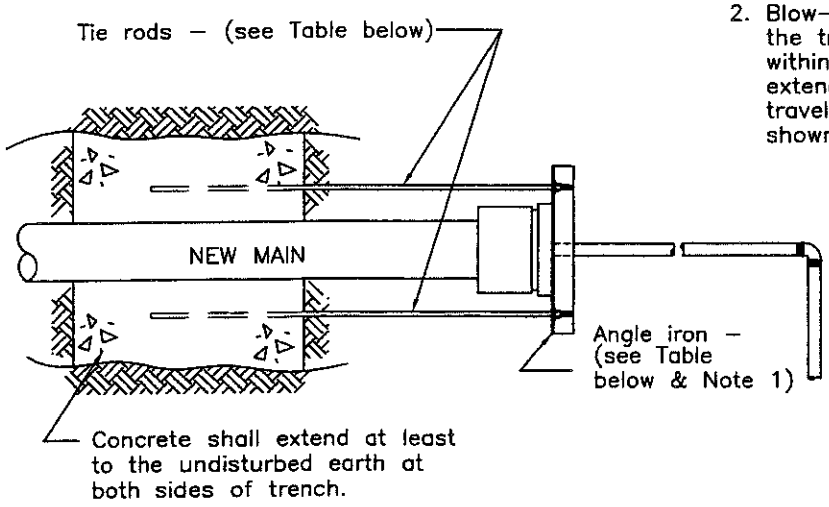

PLAN

MINIMUM DIMENSIONS					
PIPE SIZE	TIE RODS	ANGLE IRON	BEARING AREA	A	SIZE B.O.
6"	5/8"	3"x3"x1/4" *	4 Sq. Ft.	2'	2"
8"	3/4"	3 1/2"x3"x1/4"*	7 Sq. Ft.	3'	2"
12"	1–1/8"	4"x3"x1/2"	15 Sq. Ft.	3'	3"
OVER 12"	BY THE DESIGN ENGINEER				3"

* (see note 1)

CITY OF SANTA ROSA	
BLOW–OFF with HARNESS	
SCALE: NONE	DATE: Sept.2002
DWN: WH CHK: G.C.	APPROVED
FILE NO. STD.– 861	

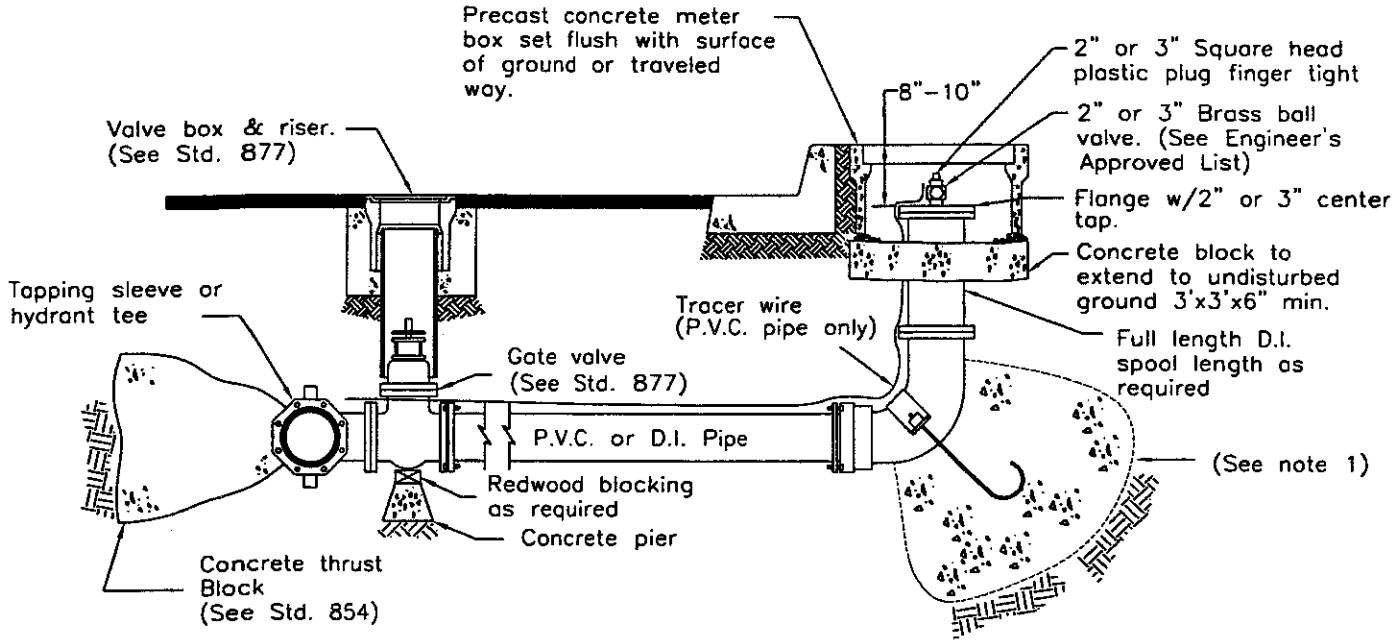

NOTES

1. Restrained joints are required for all new construction from gate valve to 90° bend. Thrust blocks are only required where existing services are being modified and restrained joints are not used.

2. Blowoff piping to be the same size as the main.

Approved Box & Cover

(See Engineer's Approved List)

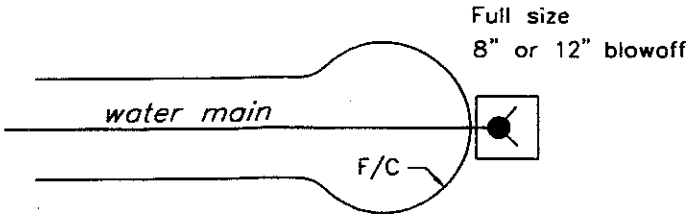

Cul-de-Sac

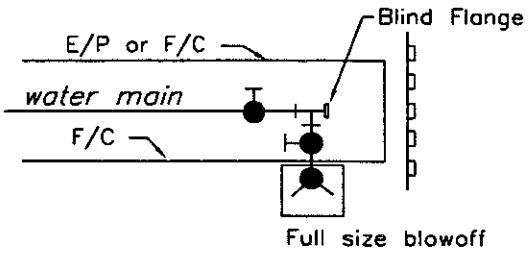

Deadend Street

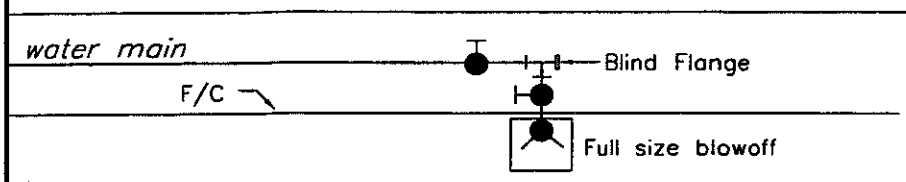

Thru-Street

CITY OF SANTA ROSA	
FULL SIZE BLOW-OFF	
SCALE: NONE	DATE: Sept.2002
DWN: GC CHK: WH	APPROVED
	FILE NO. STD.-862

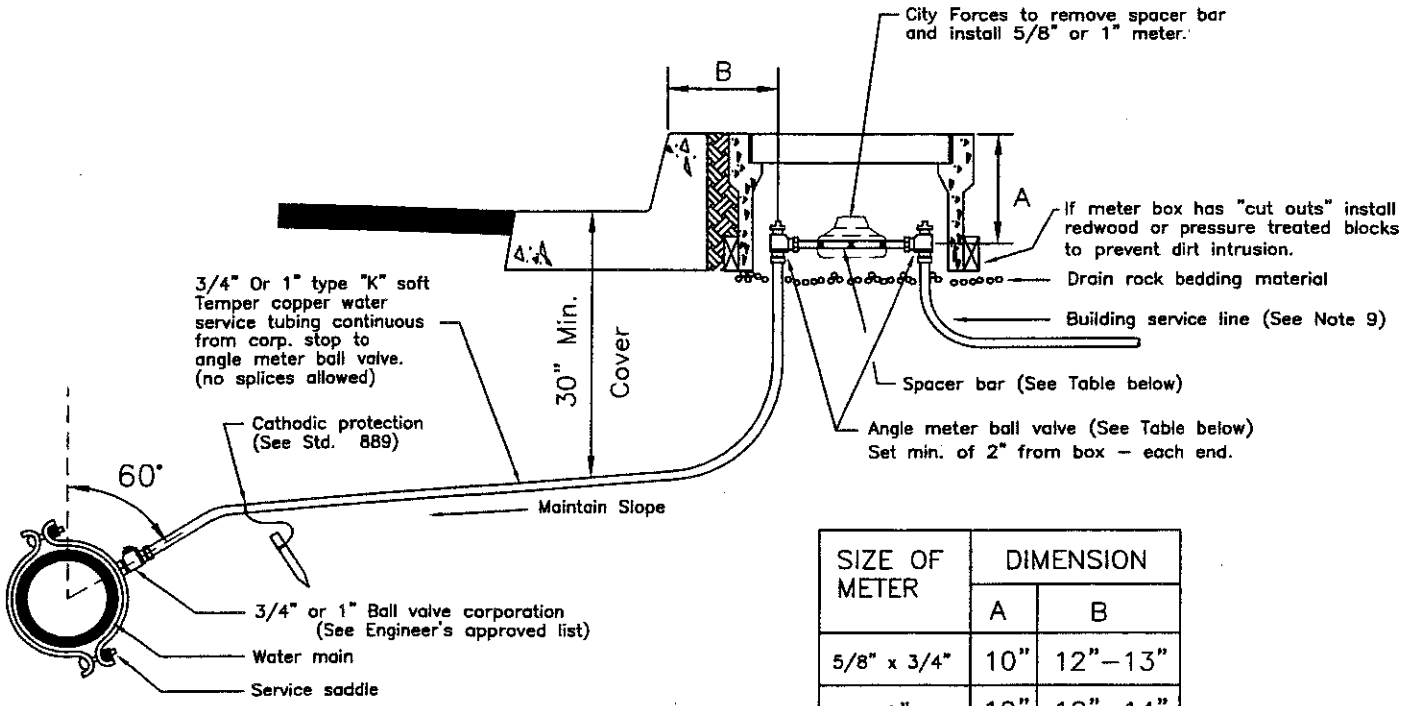

SIZE OF METER	DIMENSION	
	A	B
5/8" x 3/4"	10"	12"–13"
1"	10"	12"–14"

NOTES

1. Service lateral bedding material to be compacted to minimum 90% relative compaction prior to installation of copper service tubing.
2. Unless otherwise specified on the plans, provide for 5/8" x 3/4" meter installation for residential uses and 1" meter installation for commercial uses.
3. Unless otherwise specified on the plans, install 3/4" service tubing for residential uses and 1" service tubing for commercial uses. For unknown commercial uses, install 2" service per standard 865.
4. Contractor to install schl. 80 PVC spacer with threads on both ends. Drill 1/2" ø holes @ 2" O.C. through pipe after testing service lateral.
5. Meter box must be set flush with top of curb or sidewalk, if applicable.
6. Prior to meter set, address to be clearly marked on topside lip of meter box with permanent felt marker.
7. For 5/8" x 3/4" meter installation on a 1" water service lateral, use a reducing adapter.
8. Traffic loading box & lid to be installed in all driveways or locations where vehicular traffic may occur, and where specified on plans.
9. At a minimum, extend building service line to 12" beyond back of meter box and cap. Where sidewalk is being installed by the public improvements contractor, extend building service line to 12" beyond back of sidewalk and cap. If permanent meter set is requested prior to completion of property side plumbing, a minimum of 10' of the building service line must be installed with a hose bib on a riser above finished grade.

METER SETTING ASSEMBLY PARTS LIST

METER SIZE	VALVES	SPACER BAR (SEE NOTE 4)
5/8" x 3/4"	(See Engineer's approved list)	1"ø x 7–3/4" Schl. 80 PVC Pipe
1"	(See Engineer's approved list)	1–1/4"ø x 11" Schl. 80 PVC Pipe

METER BOXES AND COVERS

(See Engineer's approved list)

APPROVED TAPPING SERVICE SADDLES

(See Engineer's approved list)

CITY OF SANTA ROSA

3/4" & 1"
WATER SERVICE LATERAL
FOR 5/8" x 3/4" & 1" METERS

SCALE: NONE	DATE: Sept.2002	
DWN: GC CHK:	APPROVED	FILE NO. STD.– 863

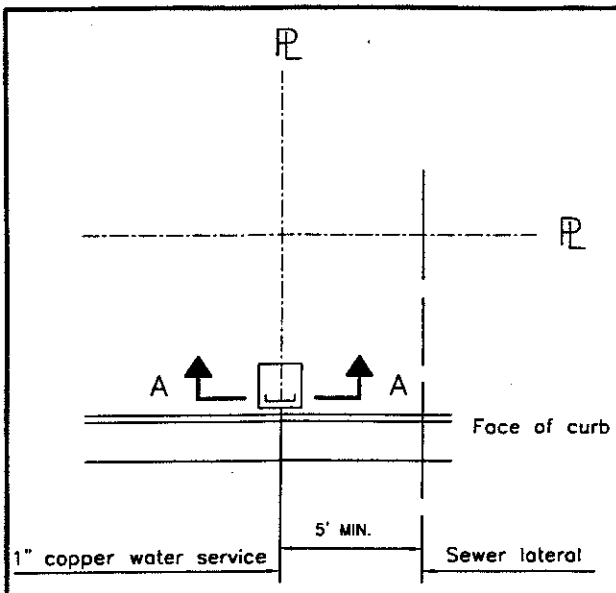

PLAN VIEW

APPROVED CONCRETE METER BOX & LID

(See Engineer's approved list)

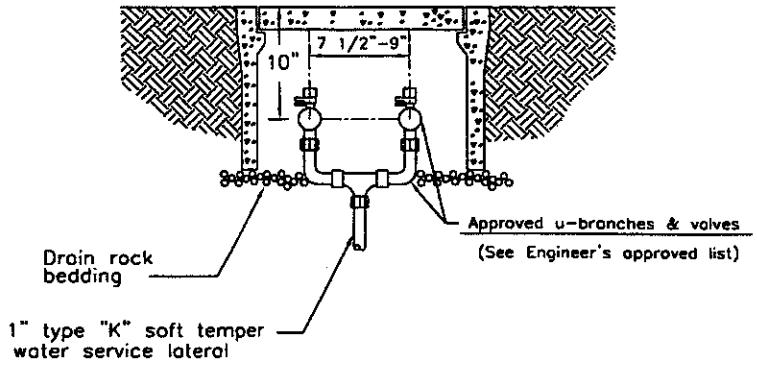

SECTION A-A

SINGLE METER BOX INSTALLATION FOR DUAL 3/4" MANIFOLD

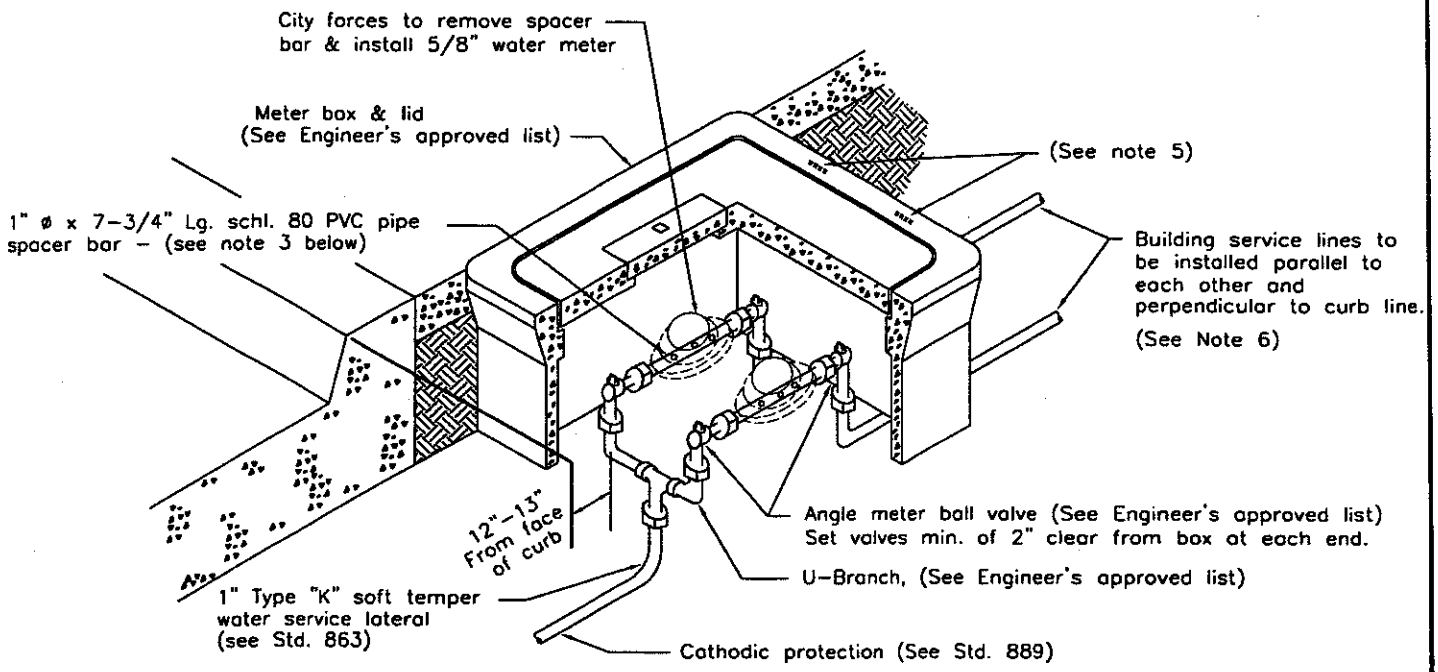

NOTES:

1. Meter box to be installed so that reading lid is centered over the meter registers.
2. In traffic loading areas, install two individual meter boxes and replace U-branch with field-made manifold.
3. Contractor to install schl. 80 pvc spacer with threads on both ends. Drill 1/2"ø holes @ 2" O.C. through pipe after testing service lateral.
4. Meter box knockouts will not be allowed.
5. Prior to meter set, address to be clearly marked on topside lip of meter box over each service with permanent felt marker.
6. At a minimum, extend building service lines to 12" beyond back of meter box and cap. Where sidewalk is being installed by the public improvements contractor, extend building service line to 12" beyond back of sidewalk and cap. If permanent meter set is requested prior to completion of property side plumbing, a minimum of 10' of the building service line must be installed with a hose bib on a riser above finished grade.

CITY OF SANTA ROSA		
1" DUAL WATER SERVICE LATERAL		
SCALE: NONE	DATE: Sept.2002	
DWN: GC CHK:	APPROVED	FILE NO. STD.- 864

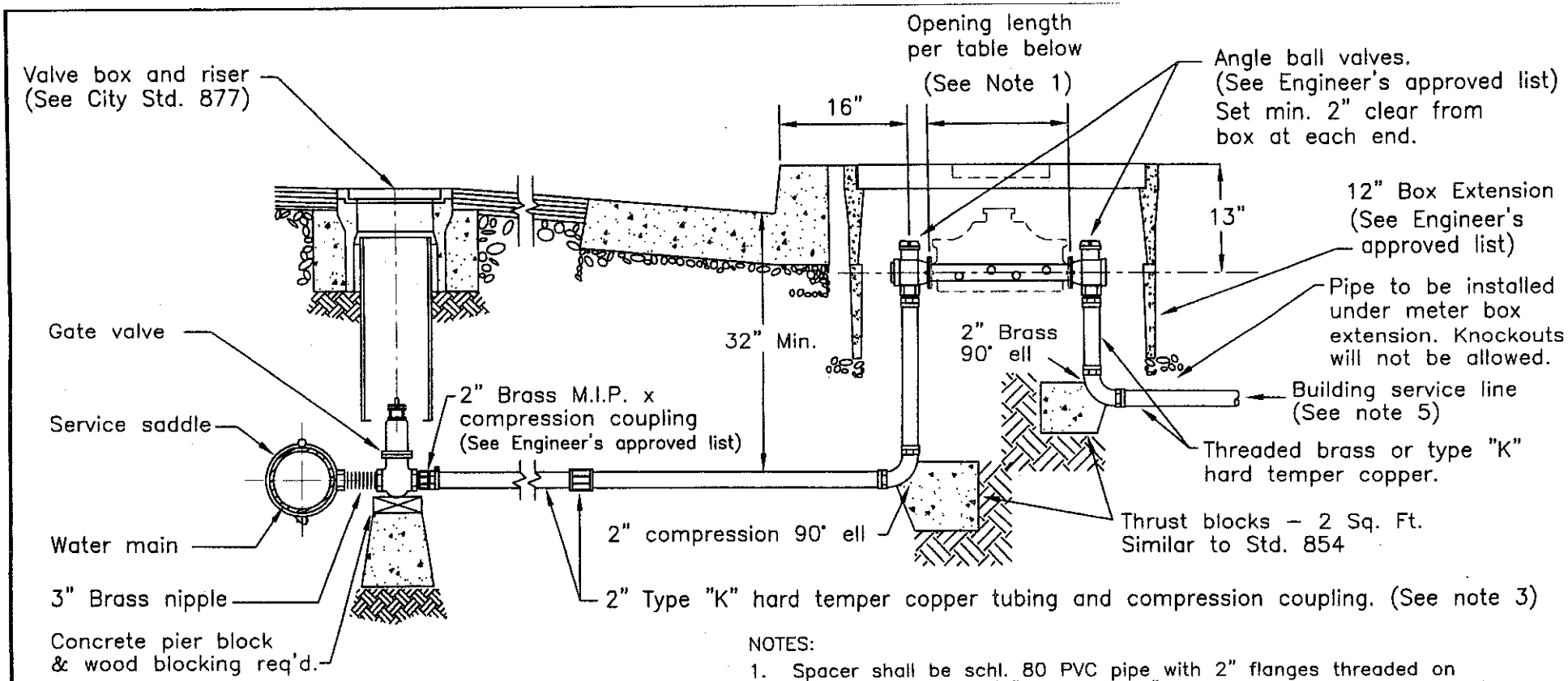

SPACER BAR ASSEMBLY TABLE

METER SIZE	Opening length	SPACER BAR (See note 1)
1 1/2"	13 1/4"	1 1/2"ø x 13" w/reducing adapter
2"	17 1/4"	2"ø x 17"

APPROVED METER BOXES AND COVERS

(See Engineer's approved list)

APPROVED TAPPING SERVICE SADDLES

(See Engineer's approved list)

NOTES:

1. Spacer shall be schl. 80 PVC pipe with 2" flanges threaded on both ends. Drill 1/2"ø holes @ 2" O.C. through spacer after testing. Spacer bar assembly length is to outside of flanges. Opening between valve flanges shall be 1/4" longer than spacer bar assembly to accommodate gaskets. City forces will remove spacer bar assembly and install meter.
2. Meter box must be set so that cover is flush with finished surface.
3. If more than one length of tubing is required, compression coupling shall be used. No compression fittings allowed under curb and gutter. (See Engineer's approved list for parts)
4. Prior to meter set, address shall be clearly marked on top of meter box with permanent marker.
5. At a minimum, extend building service line to 12" beyond back of meter box and cap. Where sidewalk is being installed by the public improvements contractor, extend building service line to 12" beyond back of sidewalk and cap. If permanent meter set is requested prior to completion of property side plumbing, a minimum of 10' of the building service line must be installed with a hose bib on a riser above finished grade.

CITY OF SANTA ROSA

2" WATER SERVICE LATERAL
FOR 2" OR 1-1/2" METER

SCALE: NONE | DATE: Sept.2002
DWN: GC
CHK:
APPROVED
FILE NO.
STD.- 865

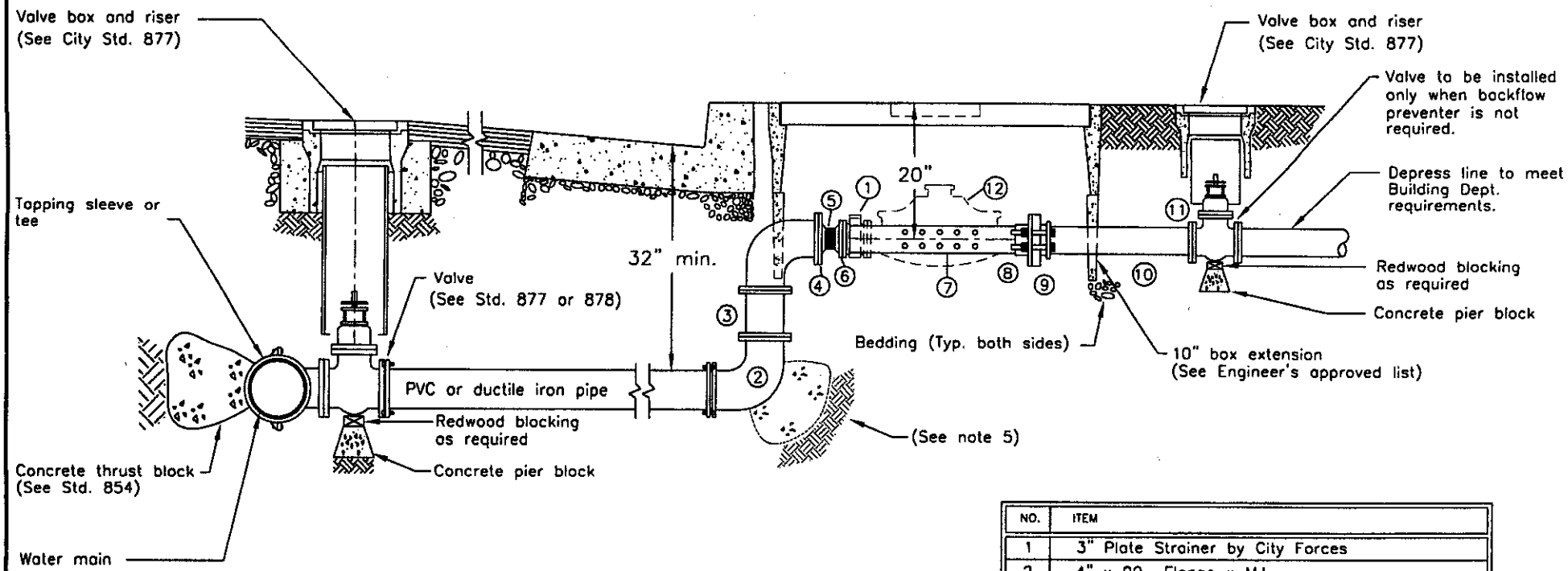

NO.	ITEM
1	3" Plate Strainer by City Forces
2	4" x 90 Flange x MJ
3	4" Flanged spool–length as required
4	4" x 3" Companion flange
5	3" Brass close nipple
6	3" x Companion flange
7	3"x 24 3/8" Schl. 40 PVC pipe (See note 1)
8	3" Schedule 80 PVC flange
9	3" Flanged coupling adapter
10	3" D.I.P. – length as req'd.
11	3"AWWA Resilient wedge gate valve (M.J.)
12	3" Meter by City Forces

NOTES:

1. Spacer shall be schedule 40 PVC pipe with 1/2"ø holes @ 2" O.C. drilled through pipe. City Forces to remove spacer bar & install 3" water meter.
2. Boxes located in traffic loading areas must be set so the steel cover is flush with finished surface.
3. Prior to meter set, address shall be clearly marked on top of meter box with permanent marker.
4. Box pipe knockouts to be grouted sufficiently to prevent intrusion of dirt. Pipe openings in box to be neatly cut – do not use hammer.
5. Restrained joints are required for all new construction from gate valve to 90° ell. Thrust blocks are only required where existing services are being modified and restrained joints are not used.

APPROVED METER BOXES, EXTENSIONS AND COVERS

(See Engineer's approved list)

APPROVED TAPPING SLEEVES

(See Engineer's approved list)

CITY OF SANTA ROSA

4" WATER SERVICE
LATERAL FOR 3" METER

SCALE: NONE | DATE: Sept.2002

DWN: GC | CHK: | APPROVED

FILE NO. STD.- 866

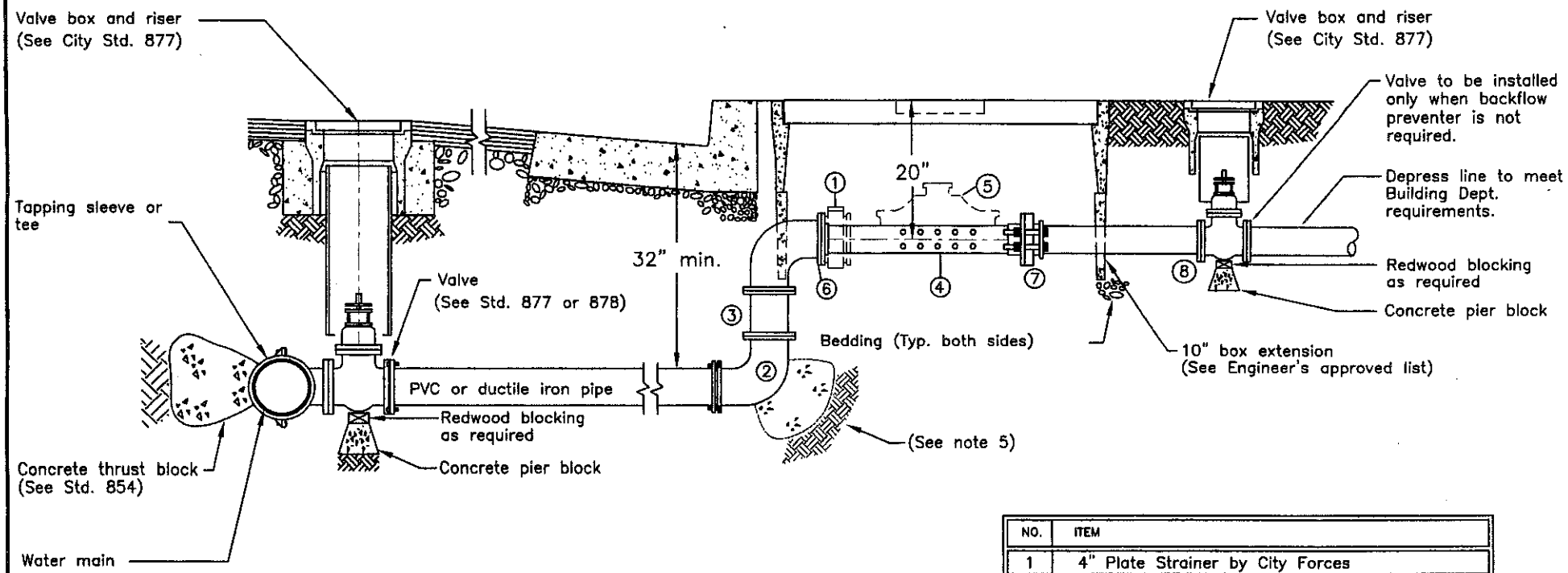

NO.	ITEM
1	4" Plate Strainer by City Forces
2	4" x 90 Flange x MJ
3	4" Flanged spool–length as required
4	4"x 29 3/8" Schl. 40 PVC pipe (See note 1)
5	Meter by City Forces
6	4" Schedule 80 PVC flange
7	4" Flanged coupling adapter
8	4" AWWA resilient wedge gate valve (M.J.)

NOTES:

1. Spacer shall be schedule 40 PVC pipe with 1/2"ø holes @ 2" O.C. drilled through pipe. City Forces to remove spacer bar & install 4" water meter.
2. Boxes located in traffic loading areas must be set so the steel cover is flush with finished surface.
3. Prior to meter set, address shall be clearly marked on top of meter box with permanent marker.
4. Box pipe knockouts to be grouted sufficiently to prevent intrusion of dirt. Pipe openings in box to be neatly cut – do not use hammer.
5. Restrained joints are required for all new construction from gate valve to 90° ell. Thrust blocks are only required where existing services are being modified and restrained joints are not used.

APPROVED METER BOXES, EXTENSIONS AND COVERS

(See Engineer's approved list)

APPROVED TAPPING SLEEVES

(See Engineer's approved list)

CITY OF SANTA ROSA

4" WATER SERVICE LATERAL FOR 4" METER

SCALE: NONE | DATE: Sept.2002

DWN: GC | CHK: | APPROVED | FILE NO. STD.- 867

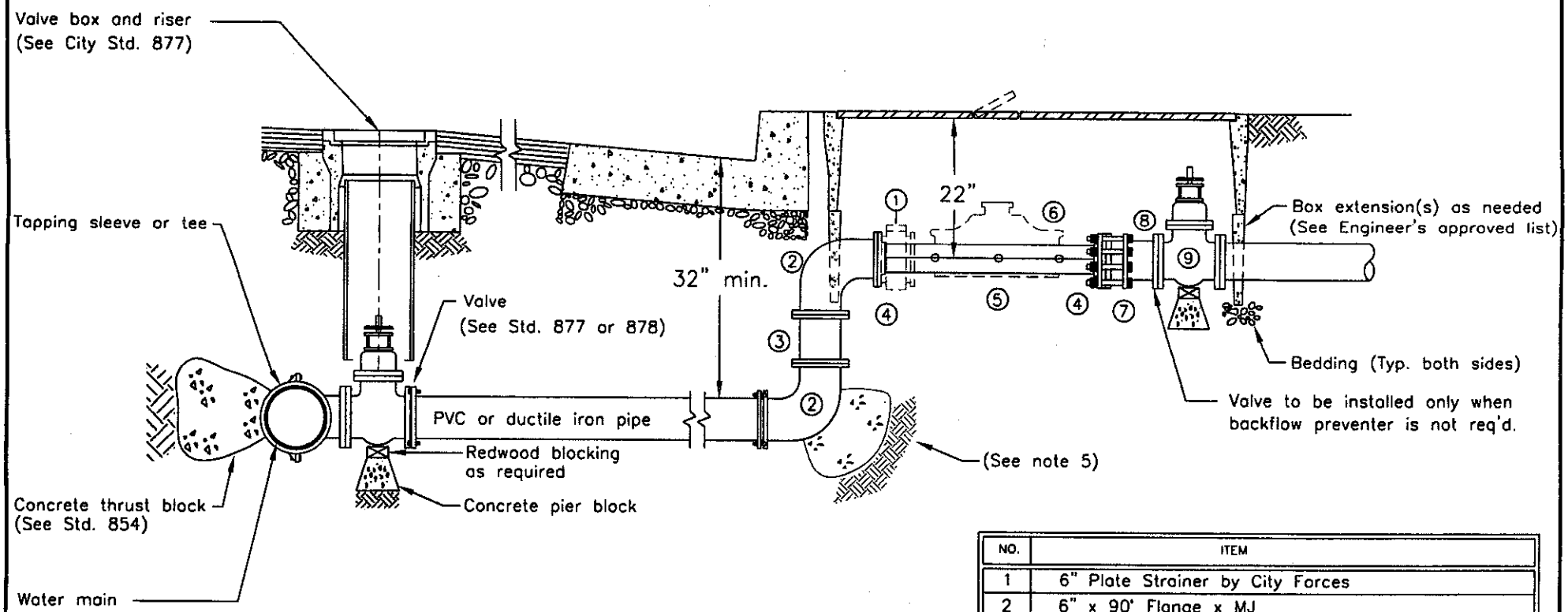

NO.	ITEM
1	6" Plate Strainer by City Forces
2	6" x 90° Flange x MJ
3	6" Flanged spool – length as required
4	6" Schedule 80 PVC flange
5	6" x 33 3/8" Sch. 40 PVC pipe – See note 1
6	6" Turbine meter by City Forces
7	6" Flanged coupling adapter
8	6" Fl.x P.E. piece – length as required
9	6" AWWA resilient wedge gate valve (MJ)

NOTES:

1. Contractor to install schl. 40 PVC pipe spacer with 1/2"ø Holes @ 2" O.C. drilled through pipe. City Forces to remove spacer bar & install 6" water meter.
2. Boxes located in traffic areas must be set so the steel cover is flush with the finished surface.
3. Prior to meter set, address to be clearly marked on top of meter box with permanent marker.
4. Box pipe knockouts to be grouted sufficiently to prevent intrusion of dirt. Pipe openings in box to be neatly cut – do not use hammer.
5. Restrained joints are required for all new construction from gate valve to 90° ell. Thrust blocks are only required where existing services are being modified and restrained joints are not used.

APPROVED METER BOXES, EXTENSIONS AND COVERS

(See Engineer's approved list)

APPROVED TAPPING SLEEVES

(See Engineer's approved list)

CITY OF SANTA ROSA

6" WATER SERVICE
LATERAL FOR 6" METER

SCALE: NONE | DATE: Sept.2002
DWN: GC | APPROVED
CHK: | FILE NO.
STD.- 868

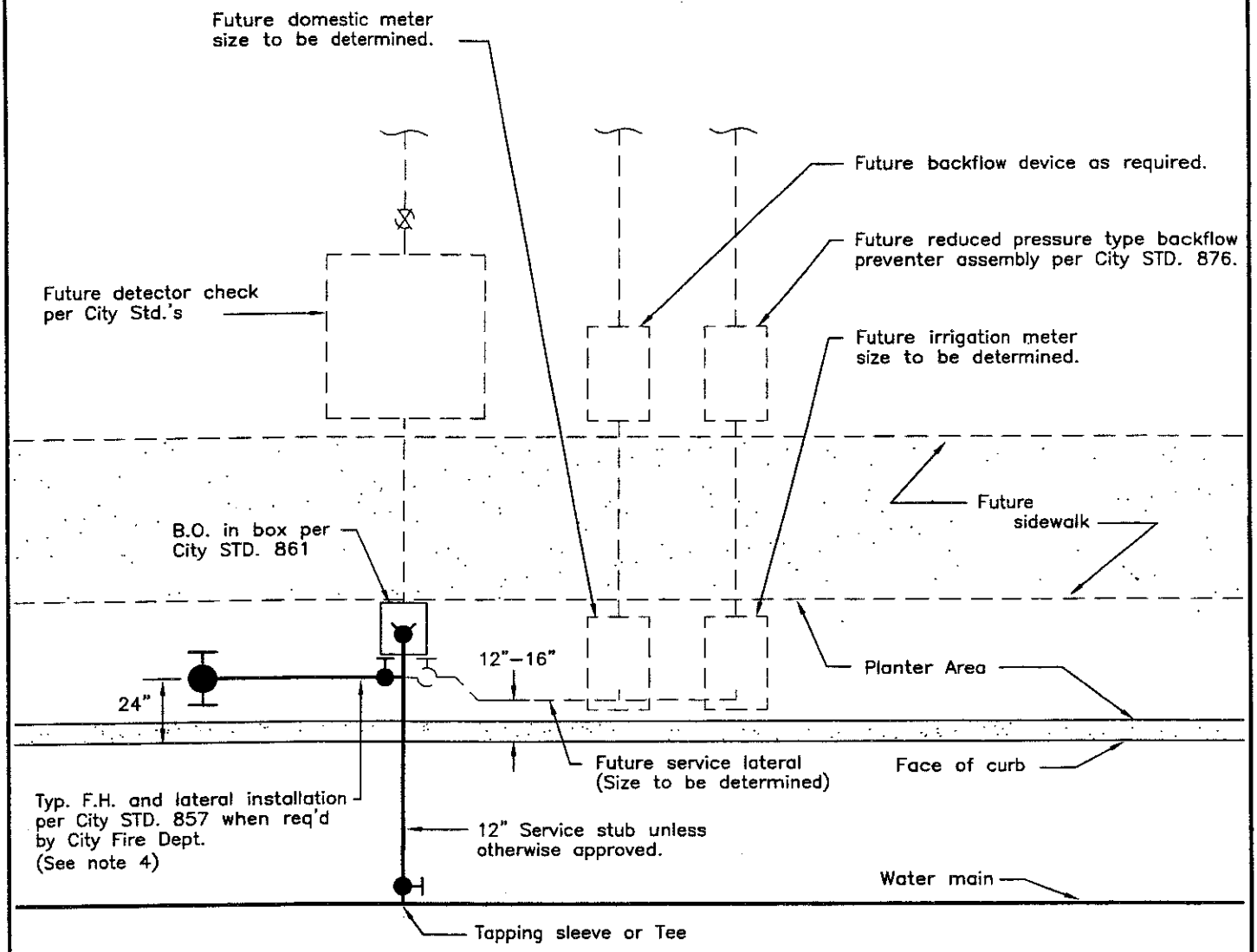

NOTES:

1. This standard applies to commercial and multi–residential developments where domestic, irrigation, or fire protection requirements are not established at the time of application.
2. Utilities Dept. approval must be obtained prior to installation
3. Where a hydrant is required, install an 8" x 6" cross or 12" x 6" cross as appropriate. Where a hydrant is not required, install manifold connection per the appropriate service lateral Standard.
4. Use a slotted break–off riser as necessary to enable proper orientation of the fire hydrant outlets.
5. Restrained joints are required from gate valve to blowoff for all new construction.

CITY OF SANTA ROSA		
COMBINATION WATER SERVICE STUB		
SCALE: NONE	DATE: Sept.2002	
DWN: GC CHK:	APPROVED	FILE NO. STD.– 869

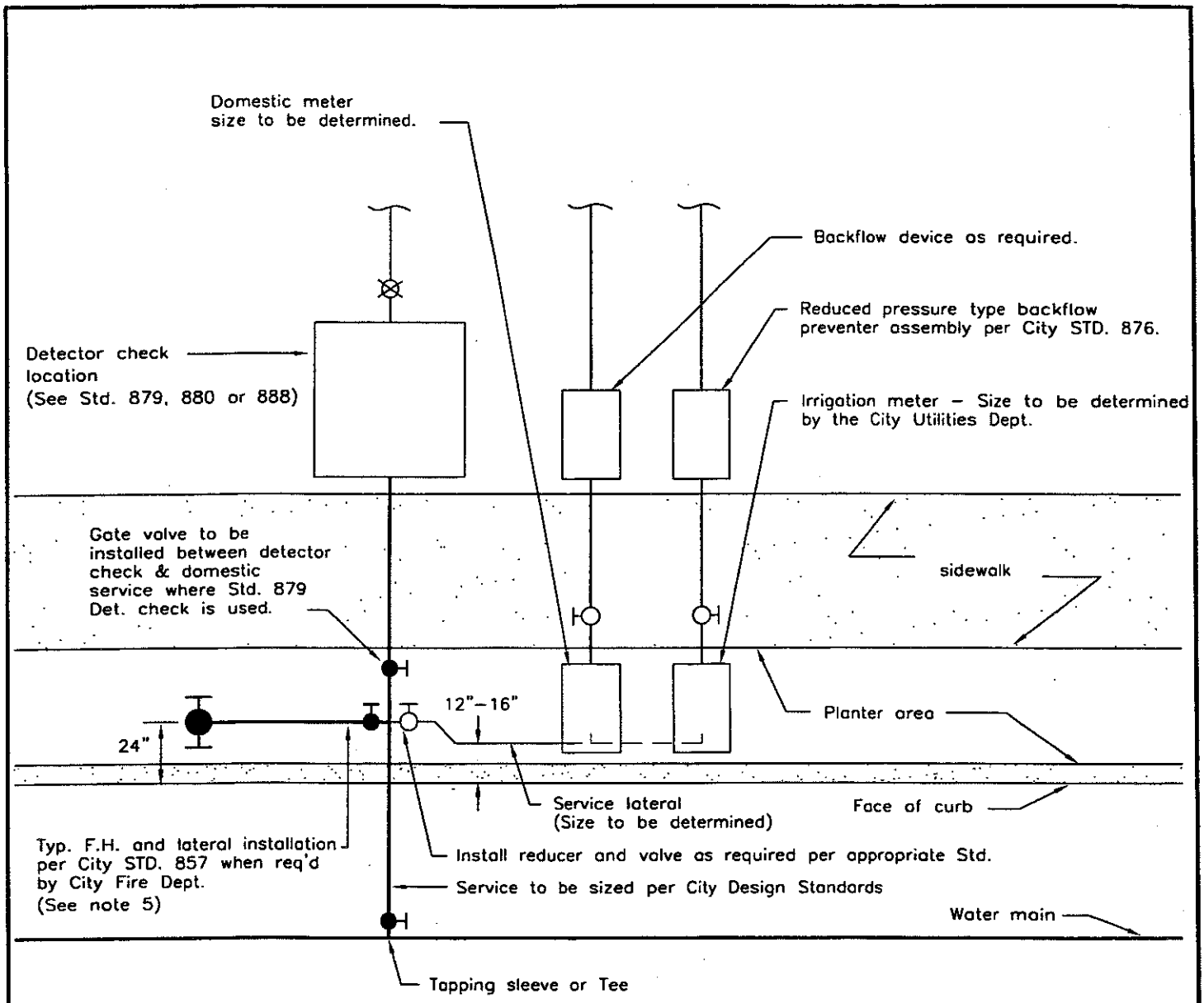

NOTES:

1. This standard applies to commercial and multi-residential developments where domestic, irrigation, or fire protection requirements are established at the time of application.

2. When referring to this standard, specify meter and detector check sizes and appropriate standard plans.

3. When field conditions preclude the installation of meters at or near the curb line, submit detailed plans of the proposed installation for Utilities Dept. approval. All meter installations must be within public right-of-way.

4. Where a hydrant is required, install an 8" x 6" cross or 12" x 6" cross as appropriate. Where a hydrant is not required, install manifold connection per the appropriate service lateral Standard.

5. Use a slotted break-off riser as necessary to enable proper orientation of the fire hydrant outlets.

6. Restrained joints are required for all new construction from the gate valve at the main to the detector check valve.

CITY OF SANTA ROSA		
COMBINATION WATER SERVICE		
SCALE: NONE	DATE: Sept.2002	
DWN: GC CHK:	APPROVED	FILE NO. STD.- 870

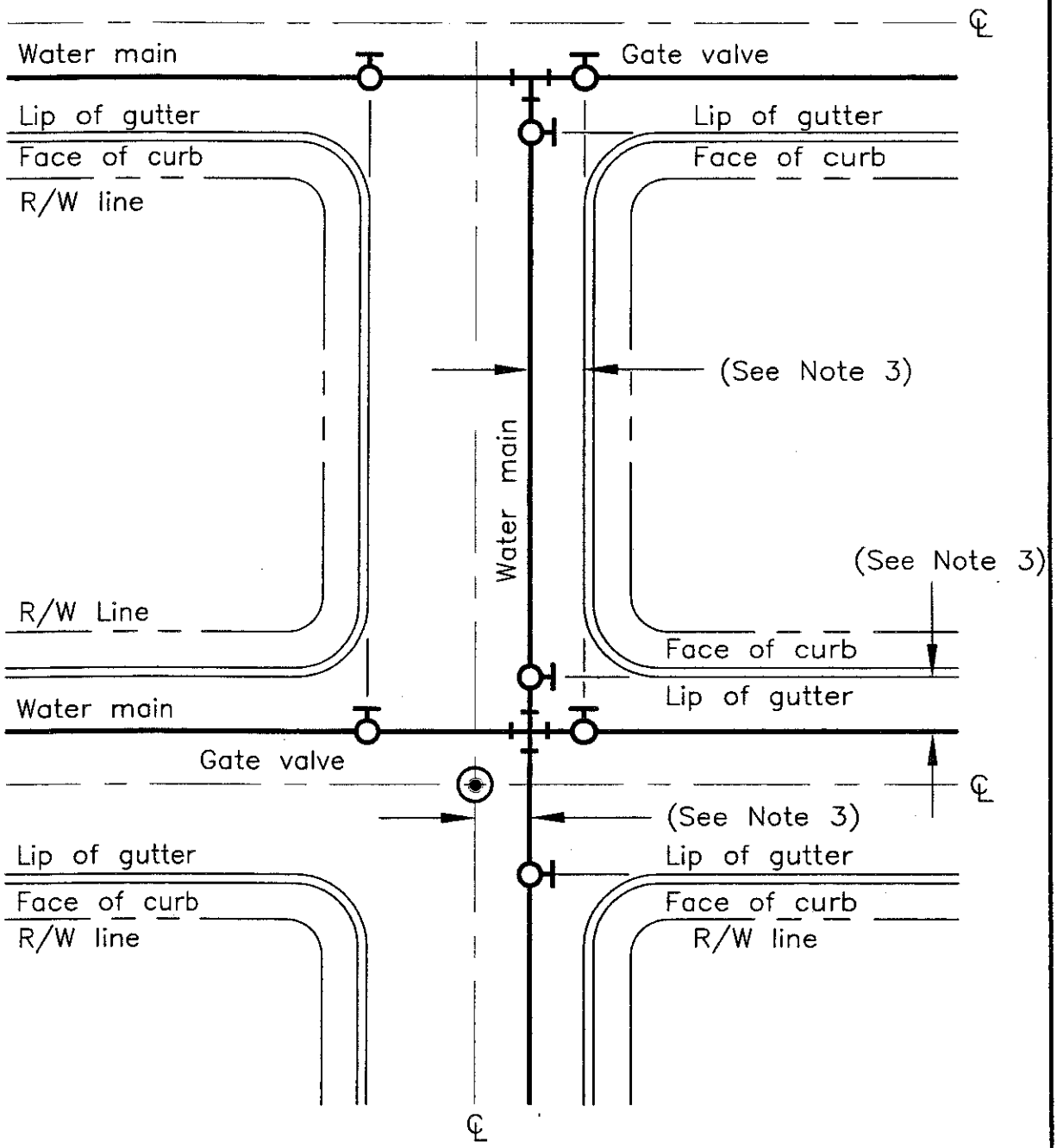

NOTES

1. Water mains shall be located parallel to street centerlines unless conflicts with other underground facilities cannot be avoided.

2. Non-standard alignments shall be approved by the Utilities Dept. prior to installation. Mainline valves, except hydrant valves and tapping valves, shall be on face of curb extended where feasible.

3. Install mains with constant alignment whenever possible, minimum 3' from the lip of gutter and minimum 4' from centerline monuments.

CITY OF SANTA ROSA	
ALIGNMENT OF WATER MAINS AND PLACEMENT OF MAIN VALVES	
SCALE: NONE	DATE: Sept.2002
DWN: GC CHK:	APPROVED FILE NO. STD.- 871

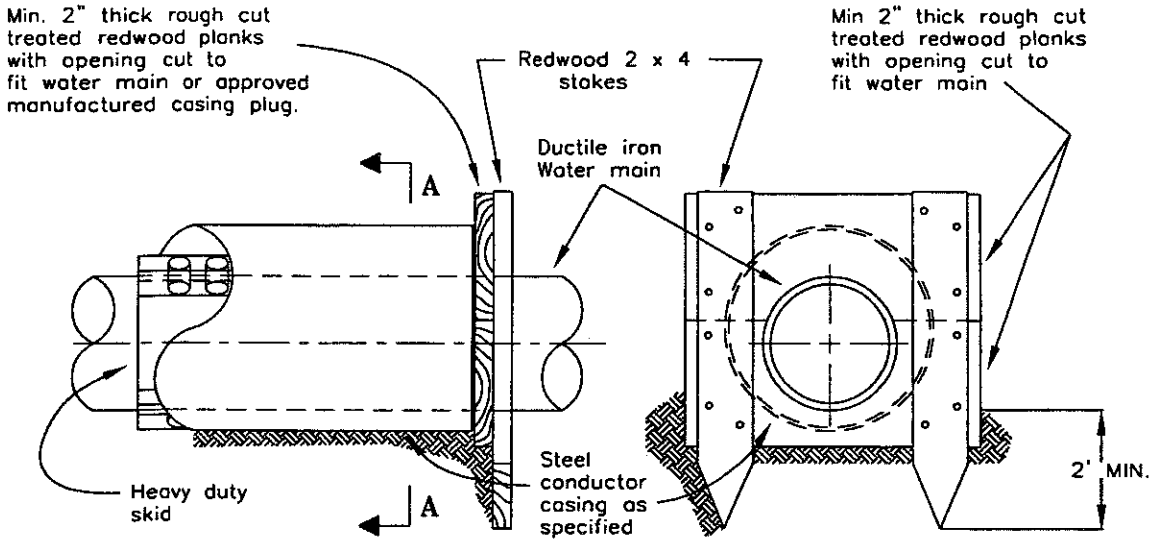

TYPICAL DIRT STOP DETAIL

NO SCALE

NOTES

1. Install skids per manufacturers specifications.
2. See Engineer's approved list for approved skids.
3. Where conductor casing is existing R.C.P., banded redwood skids may be installed in lieu of polyethylene skids with Utilities Dept. approval.

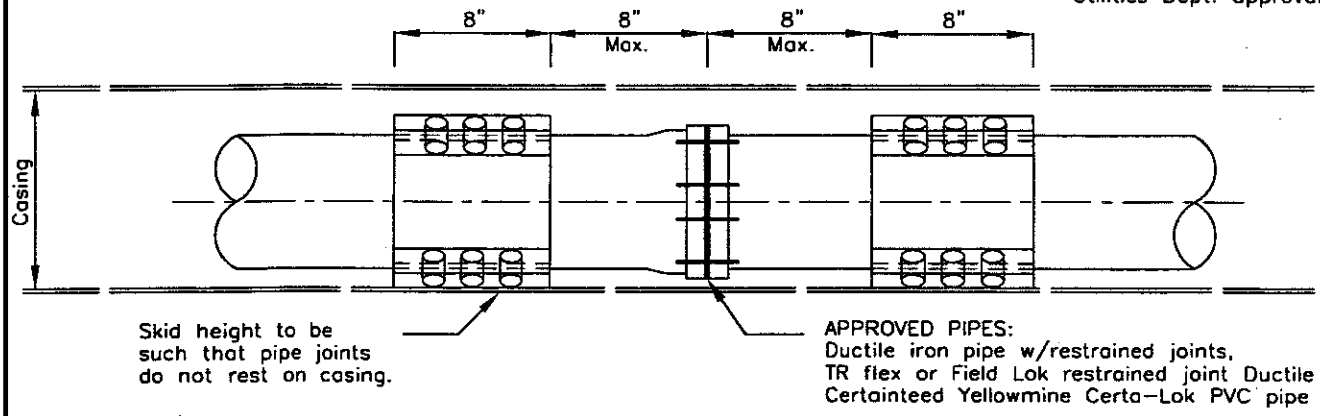

TYPICAL PIPE JOINT AND INSULATOR

NO SCALE

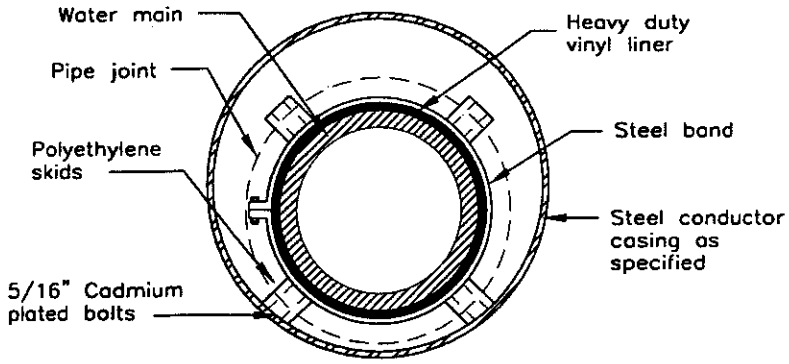

SECTION "A-A"

NO SCALE

Minimum size casing required
For all approved pipe types

Pipe Size	6"	8"	12"	14"	16"
Casing Size (Inside ø)	16"	18"	24"	24"	30"
Casing Wall Thickness	.375"	.375"	.375"	.375"	.500"

CITY OF SANTA ROSA

DIRT STOP AND WATER MAIN ENCASEMENT

SCALE: NONE | DATE: Sept.2002

DWN: TBM | APPROVED | FILE NO.

CHK: G.C. | STD.- 872

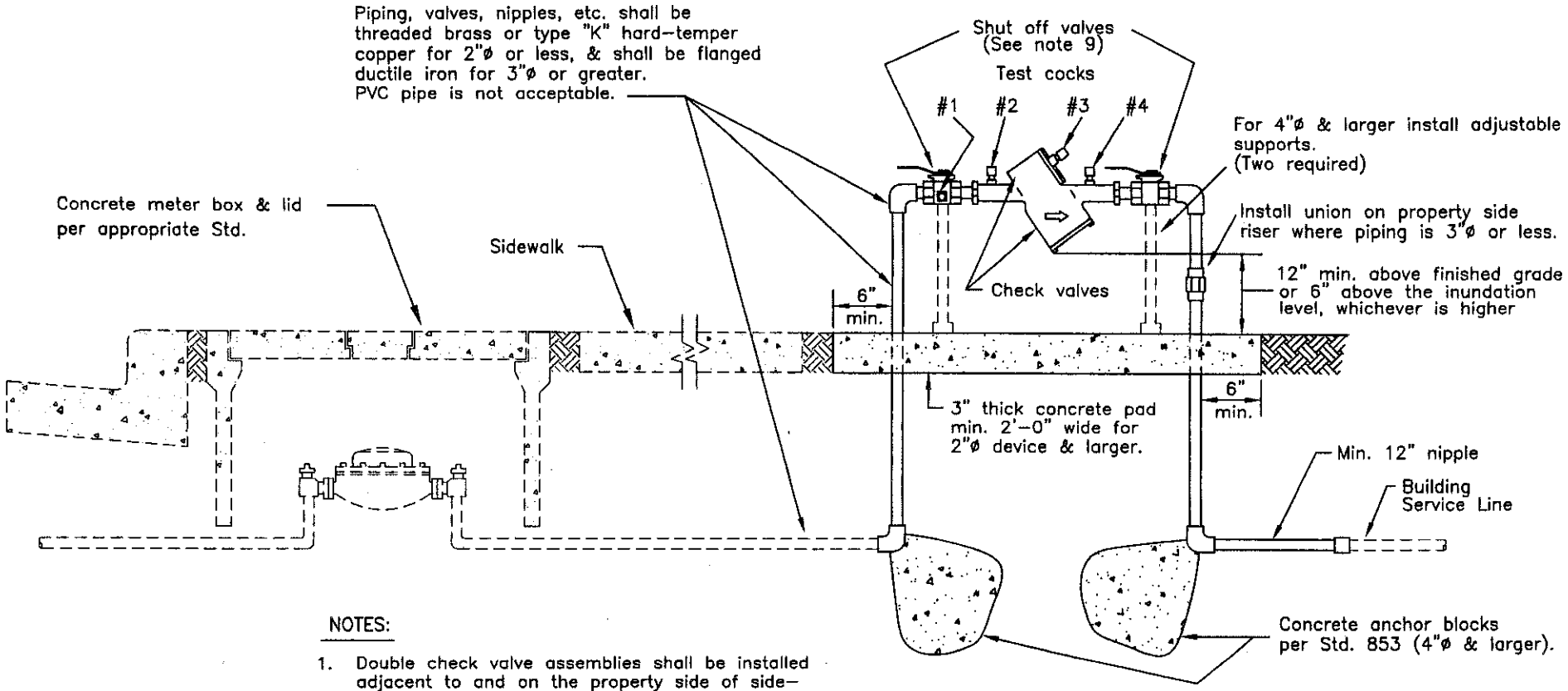

NOTES:

1. Double check valve assemblies shall be installed adjacent to and on the property side of side-walk where applicable. Where no sidewalk exists, the double check valve assemblies shall be installed as close as possible to the water meter location. Any conflicts shall be resolved by the City Utilities Dept.

2. Approved double check valves shall be as shown on "List Of Approved Backflow Prevention Devices" (Latest Revision) by the University of Southern California Foundation For Cross - Connection Control & Hydraulic Research.

3. All double check valve assemblies shall be provided with a minimum of four (4) test cocks.

4. Double check valve assemblies shall be required for any use where an intermediate hazard exists. To be installed on all services to properties with wells, and other domestic services as determined by the City Utilities Dept.

5. The piping from the meter to the double check valve assembly and the double check valve assembly itself must be the same size as the meter unless otherwise approved by the Utilities Dept.

6. This Std. will be used for all commercial installations requiring a double check valve type backflow preventer.

7. If above ground installation is not feasible install per Std. 875 after approval by the City Utilities Dept.

8. Any cover or screening for the backflow prevention assembly must be approved by the Utilities Dept. prior to installation.

9. Valves 2"ø & less shall be ball valves, 3"ø and greater shall be resilient seat gate valves.

CITY OF SANTA ROSA

ABOVE GROUND
DOUBLE CHECK VALVE
BACKFLOW DEVICE

SCALE: NONE | DATE: Sept.2002

DWN: GC | APPROVED

CHK: | FILE NO.

STD.- 874

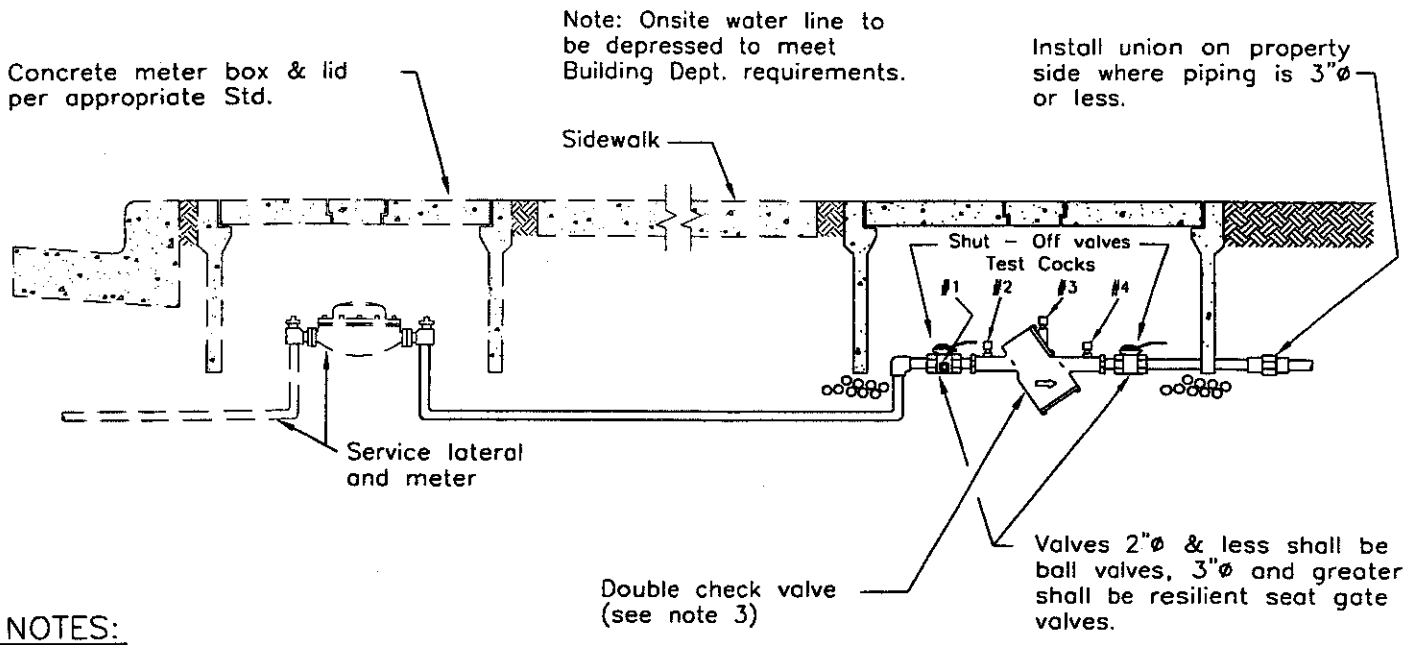

NOTES:

1. This Standard applies to residential connections with auxiliary water supplies onsite or where residential fire sprinkler systems are installed. Where residential fire sprinkler systems are designed to circulate water with the domestic systems, no backflow device is required.

2. Double check valve assemblies shall be installed adjacent to and on the property side of sidewalk where applicable. Where no sidewalk exists, the double check valve assemblies shall be installed as close as possible to the water meter location. Any conflicts shall be resolved by the City Utilities Dept.

3. Approved double check valves shall be as shown on "List Of Approved Back-flow Prevention Devices" (latest revision) by the University of Southern California Foundation For Cross-Connection Control & Hydraulic Research.

4. Piping, valves, nipples, etc. shall be threaded brass or type "K" hard-temper copper for 2"ø or less, & shall be flanged ductile iron for 3"ø or greater. PVC pipe is not acceptable.

5. All double check valve assemblies shall be provided with a minimum of four (4) test cocks.

6. See Engineer's Approved List for approved vaults and covers. The vault must be min. 6" longer than the backflow assembly.

7. The piping from the meter to the double check valve assembly and the double check valve assembly itself must be the same size as the meter unless otherwise approved by the Utilities Dept.

8. To be used only upon the specific approval of the Director Of Utilities.

Residential Fire Line Connection Details

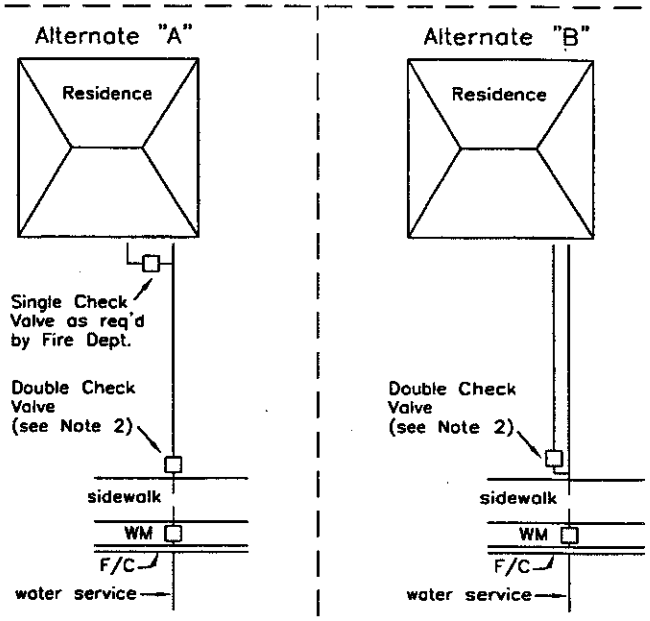

This alternate allows the connection of the fire line to the domestic supply line with a single check valve near the residence. The check valve must be readily accessible.

This alternate allows the connection of the fire line to the domestic supply line near the back of sidewalk with a double check valve with dual lines joint-trenched to residence.

CITY OF SANTA ROSA		
BELOW GROUND DOUBLE CHECK VALVE BACKFLOW DEVICE		
SCALE: NONE	DATE: Sept.2002	
DWN: GC CHK:	APPROVED	FILE NO. STD.- 875

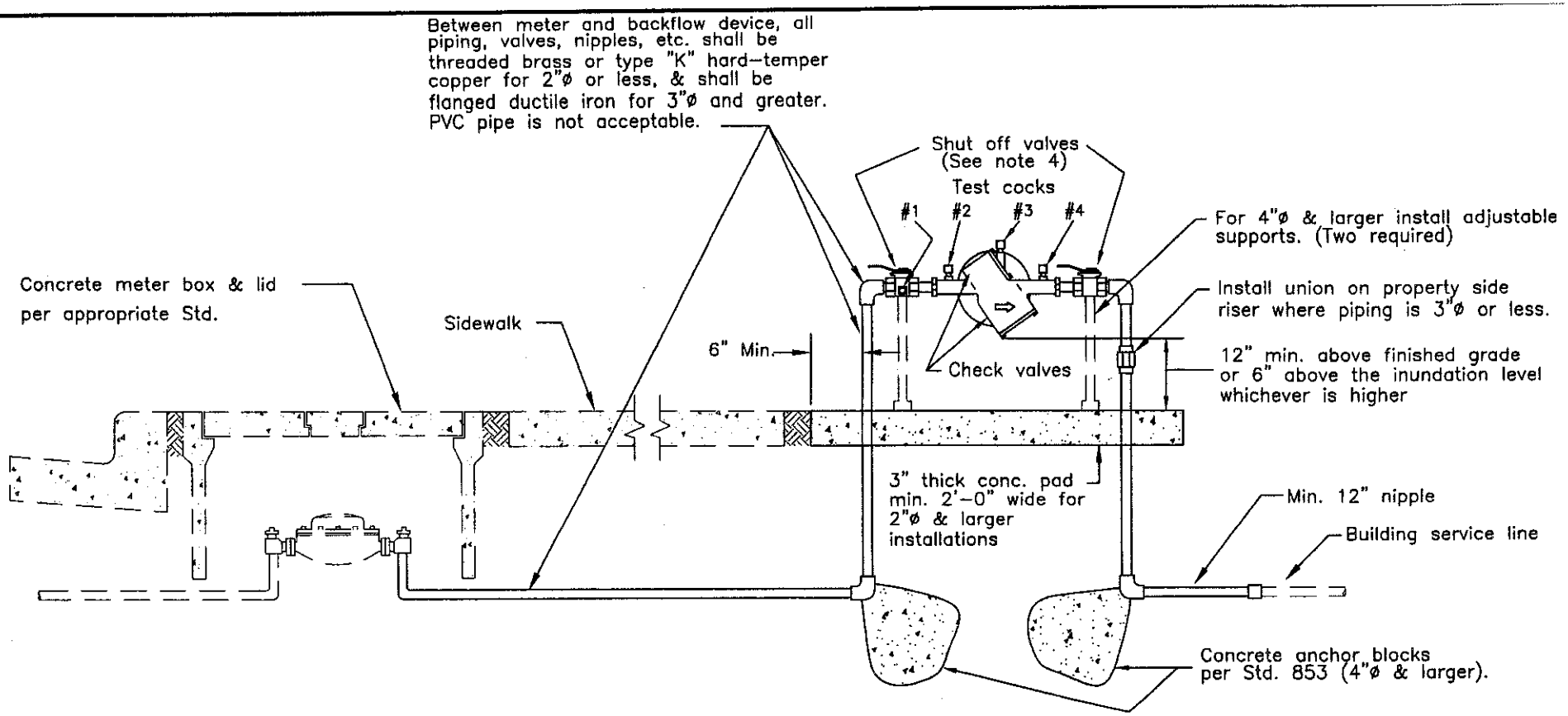

1. Reduced pressure type backflow devices shall be required as determined by the City Utilities Dept.

2. Approved reduced pressure backflow device shall be as shown on "List of approved backflow prevention devices" (of latest revision) by the University of Southern California Foundation For Cross-Connection Control & Hydraulic Research.

3. Backflow prevention devices shall be installed adjacent to and on property side of sidewalk where applicable. Where no sidewalk exists, the assembly shall be installed as close as possible to the water meter location.

4. A valve of the same size as the backflow device shall be installed on each side of the backflow prevention assembly. Valves 2"ø & less shall be ball valves, 3"ø & greater shall be resilient seat gate valves.

5. Any cover or screening for the backflow prevention assembly must be approved by the Utilities Dept. prior to installation.

6. In limited space applications valves may be installed on risers min. 4" above grade.

7. The addition of spools must be approved by the City Inspector prior to installation.

8. The piping from the reduced pressure backflow device & the reduced pressure backflow device valve assembly itself must be the same size as the meter unless otherwise approved by the Director of Utilities.

CITY OF SANTA ROSA	SCALE: NONE	DATE: Sept.2002	FILE NO.
REDUCED PRESSURE BACKFLOW DEVICE	DWN: GC	APPROVED	STD.- 876
	CHK:		

VALVE BOXES:
(See Engineer's approved list)

STEM EXTENSION FABRICATION NOTES

1. All welds to riser shaft shall be fillet weld all around as specified below.
2. All steel required for riser fabrication shall be structural steel per ASTM A36.

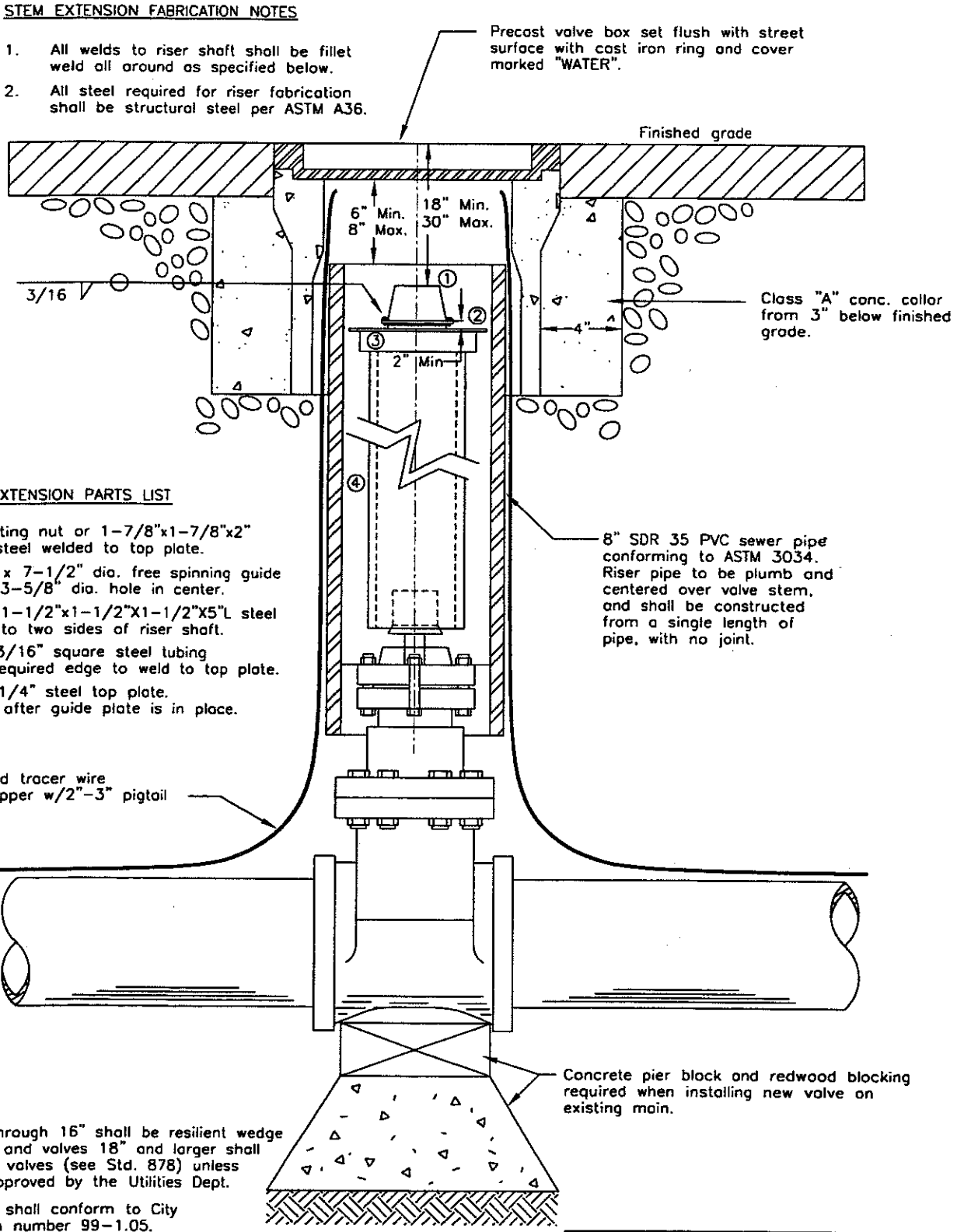

VALVE STEM EXTENSION PARTS LIST

① Valve operating nut or 1-7/8"x1-7/8"x2" high solid steel welded to top plate.

② 3/16" thk. x 7-1/2" dia. free spinning guide plate, with 3-5/8" dia. hole in center.

③ Two 3/16"x1-1/2"x1-1/2"X1-1/2"X5"L steel angle weld to two sides of riser shaft.

④ 2-1/2" x 3/16" square steel tubing length as required edge to weld to top plate.

⑤ 3" x 3" x 1/4" steel top plate. Riser shaft after guide plate is in place.

NOTES

1. Valves 2" through 16" shall be resilient wedge gate valves and valves 18" and larger shall be butterfly valves (see Std. 878) unless otherwise approved by the Utilities Dept.
2. Gate valves shall conform to City Specification number 99-1.05.
3. All external bolts and nuts on valves shall be 304 stainless steel or the entire valve shall be wrapped tightly with polyethylene film held securely with adhesive tape.
4. If valve is installed so that the top of the operating nut is less than 30" below finished grade, the valve stem riser is not required.
5. For installation of butterfly valve and tapping valve, see Std. 878.

CITY OF SANTA ROSA		
GATE VALVE		
SCALE: NONE	DATE: Sept.2002	
DWN: TBM CHK: G.C.	APPROVED	FILE NO. STD.- 877

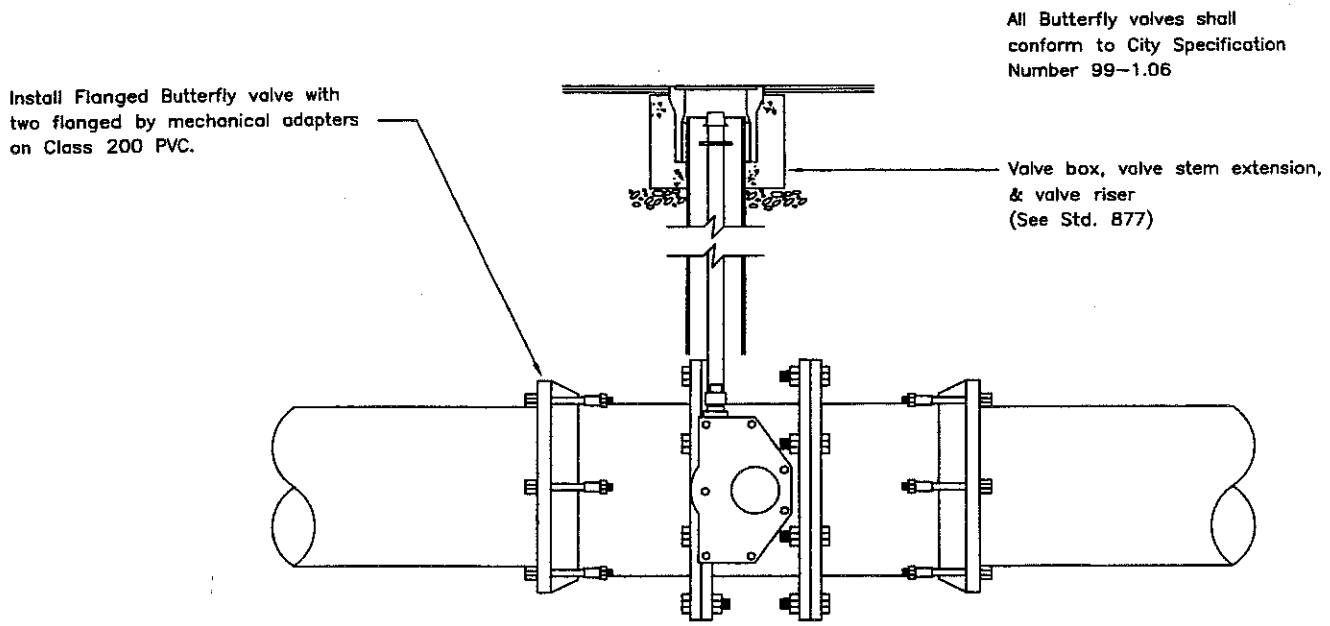

BUTTERFLY VALVE

To be used on pipe 18" and larger

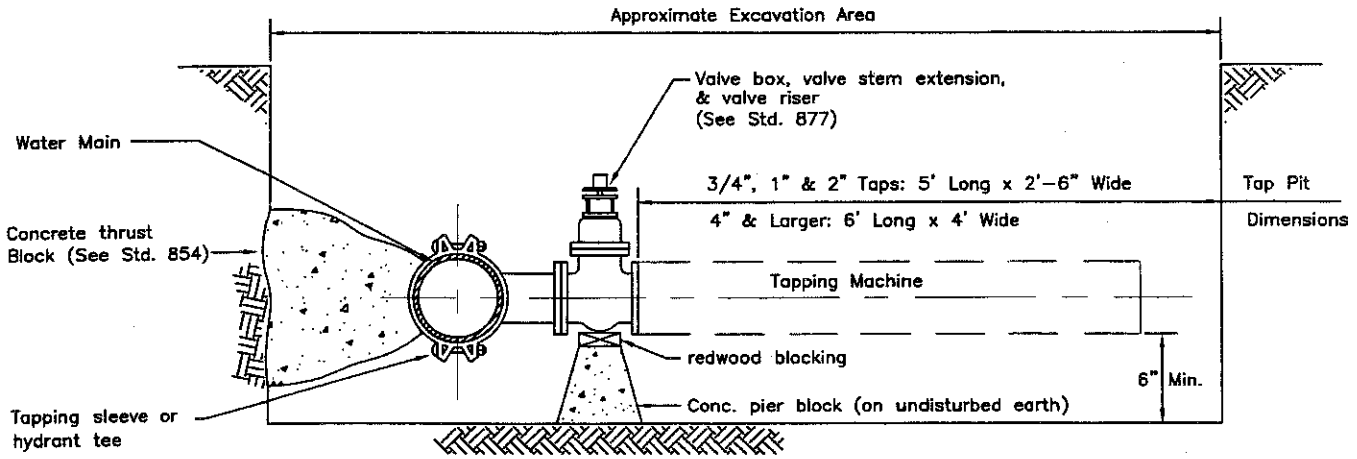

TAPPING SLEEVE & VALVE

TAPPING SLEEVES

(See Engineer's Approved List for Std. 866/867)

NOTES:

1. All external bolts and nuts on valves shall be 304 stainless steel or the entire valve shall be wrapped tightly with polyethylene film held securely with adhesive tape.
2. Taps shall be made by City forces. Schedule through the Utilities Engineering Dept.

CITY OF SANTA ROSA		
BUTTERFLY VALVE AND TAPPING VALVE		
SCALE: NONE	DATE: Sept.2002	
DWN: GC CHK:	APPROVED	FILE NO. STD.- 878

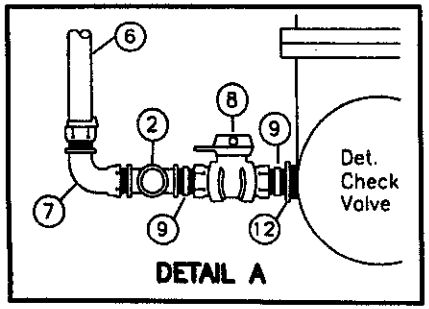

Bypass meter to be supplied & installed by the Utilities Dept. upon City approval of fire line installation

Precast vault & cover (See note 3, sheet 2)

Padlock

Valve Status Indicator to face street

OPEN

36"

Post Indicator

Sidewalk

6" Max.

1 2 3 4 5 6 7 10 11

7 1/2"

30" Min. - 36" Max.

See note 2 Sheet 2

Provide 1" conduit for tamper switch controls when req. (see note 2 sheet 2)

Grout around pipe or install dirt stops similar to Std. 872

(See note 2 Sheet 2)

P.V.C. or D.I.P.

Ball valve & tee behind ell, (See DETAIL A)

To private hydrant(s)

Post Indicator Valve (resilient wedge type)

4" thick drain rock

Restrained flange adapter (both ends)

Min. 4" thick concrete pad - length as required.

APPROVED DETECTOR CHECK VALVES
(See Engineer's Approved List)

Public Works Inspector

Fire Department Inspector

PAGE 1 OF 3

CITY OF SANTA ROSA

SINGLE CHECK DETECTOR IN VAULT

SCALE: NONE | DATE: Sept.2002

DWN: GC | CHK: | APPROVED

FILE NO. STD.- 879

BY-PASS PARTS LIST

NO.	DESCRIPTION	QUANT.	PART SIZE OR MODEL NO.*
1.	HOSE BIB – MIP	3	3/4"
2.	TEE – FIP x FIP x FIP	3	3/4"
3.	SHORT MTR SPUD – 2" L	2	C38 – 23 – 2
4.	STRAIGHT CHK. VALVE – MIP x FIP	1	HS81 – 333
5.	ADAPTER – COMP x MIP	1	C84 – 33
6.	COPPER TUBING – TYPE "K" (SOFT)	VARIES	3/4"
7.	90° ADAPTER – COMP x MIP	4	L84 – 33
8.	STRAIGHT BALL VALVE – FIP x FIP	2	B11 – 33
9.	CLOSE NIPPLE	4	3/4"
10.	90° ADAPTER – COMP x FIP	1	L14 – 33
11.	ADAPTER – COMP x FIP	2	C14 – 33
12.	BUSHING	2	3/4" x VARIES

* FORD MODEL NO's ARE GIVEN. SUBMIT SUBSTITUTIONS FOR APPROVAL.

NOTES

1. This Standard applies when above ground installation per Std. 888 is not possible due to site constraints.

2. The post indicator valve shall be installed as close as possible to the detector check vault. If a post indicator cannot be installed, an O.S. & Y. valve with locking chain must be installed inside the vault on the property side of the detector check with approval from the City Utilities Department. The installation shall be provided with electronic supervision monitoring when required by the Fire Department.

3. Refer to vault size chart for proper size. Should an O.S. & Y. valve be installed in the vault, the vault size may need to be verified by the Contractor. See the engineer's approved list for approved vaults and covers.

4. All fire line services to the post indicator valve shall be tested by the Public Works Dept. Construction inspection section per City of Santa Rosa Construction Specifications. All on-site fire lines, hydrants, and the P.I.V. shall be tested & inspected by the Fire Dept. per City Fire Code.

5. Double check detector check valve assembly with bypass double check shall be installed where the Utilities Dept. determines an extreme hazard exists. Installation details shall be approved by the Utilities Dept. prior to installation. (See Std. 880).

6. The fire department connection shall be installed and located as required by the Fire Department.

7. Post indicator valves shall be locked with a break-away lock. The top of the P.I.V. shall not be less than thirty-six inches (36") above finished grade.

VAULT SIZES		
D.C. SIZE	WIDTH	LENGTH
4"	4'	4'
6"	4'	4'
8"	5'	5'
10"	5'	5'

CITY OF SANTA ROSA		
SINGLE CHECK DETECTOR IN VAULT		
SCALE: NONE	DATE: Sept.2002	
DWN: GC CHK: GC	APPROVED	FILE NO. STD.– 879

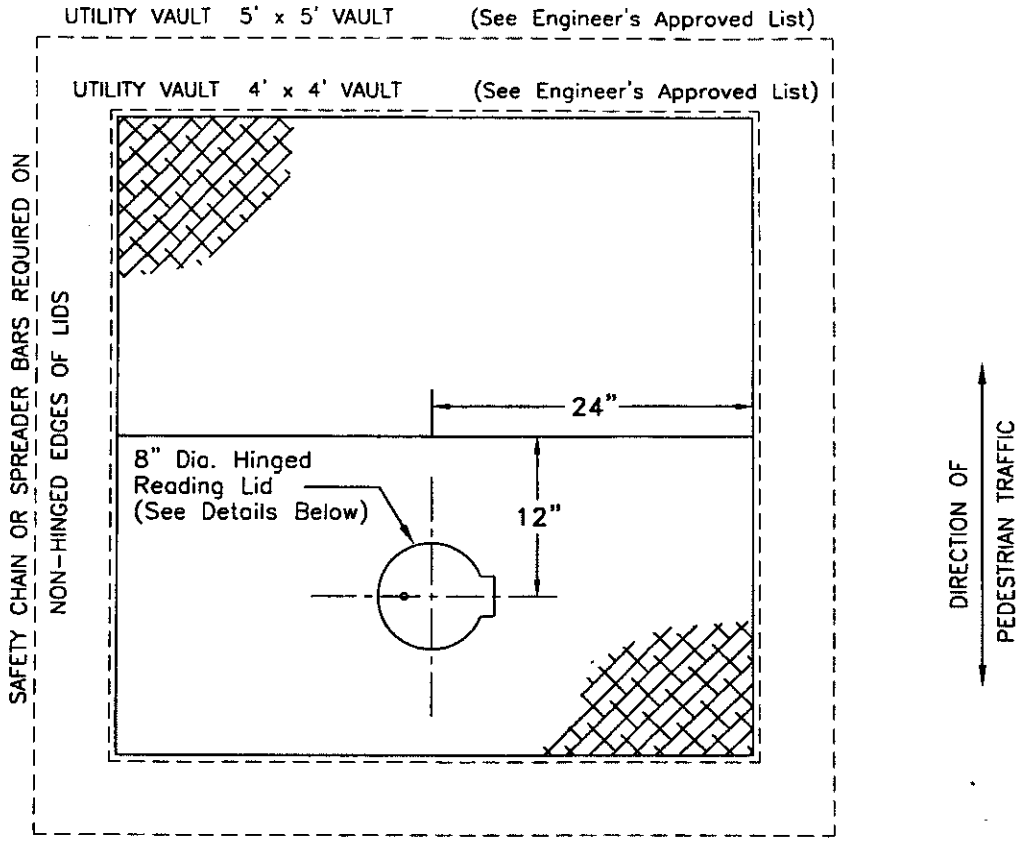

VAULT PLAN

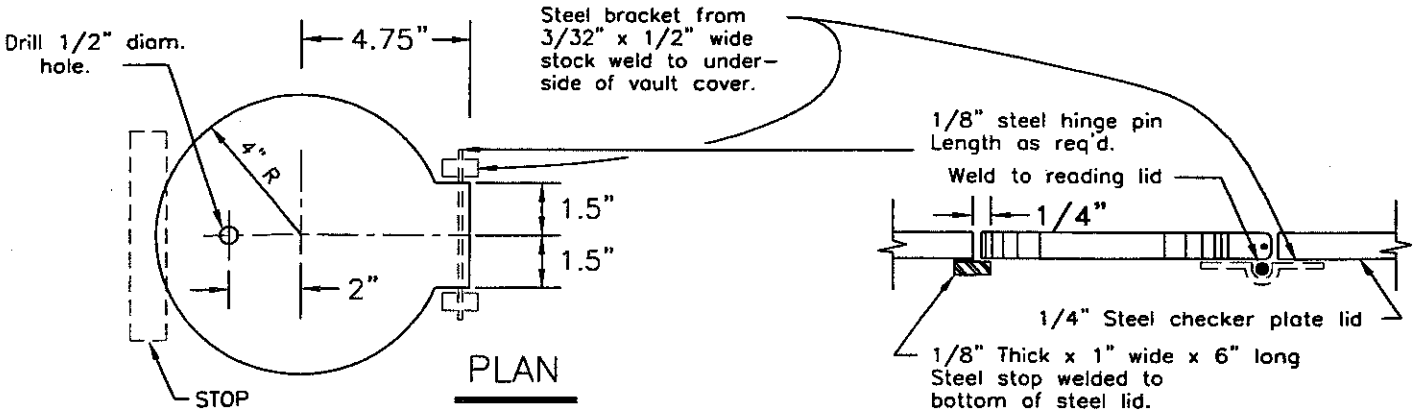

PLAN

ELEVATION

READING LID DETAILS

N.T.S.

NOTES

1. Reading lid shall be centered over the by-pass meter.
2. Galvanize coat all parts after welding. Vaults that are to be placed in pedestrian way must have lids with "all-grip" surface in lieu of galvanizing.

CITY OF SANTA ROSA	
SINGLE CHECK DETECTOR IN VAULT	
SCALE: NONE	DATE: Sept.2002
DWN: GC APPROVED	FILE NO.
CHK:	STD.- 879

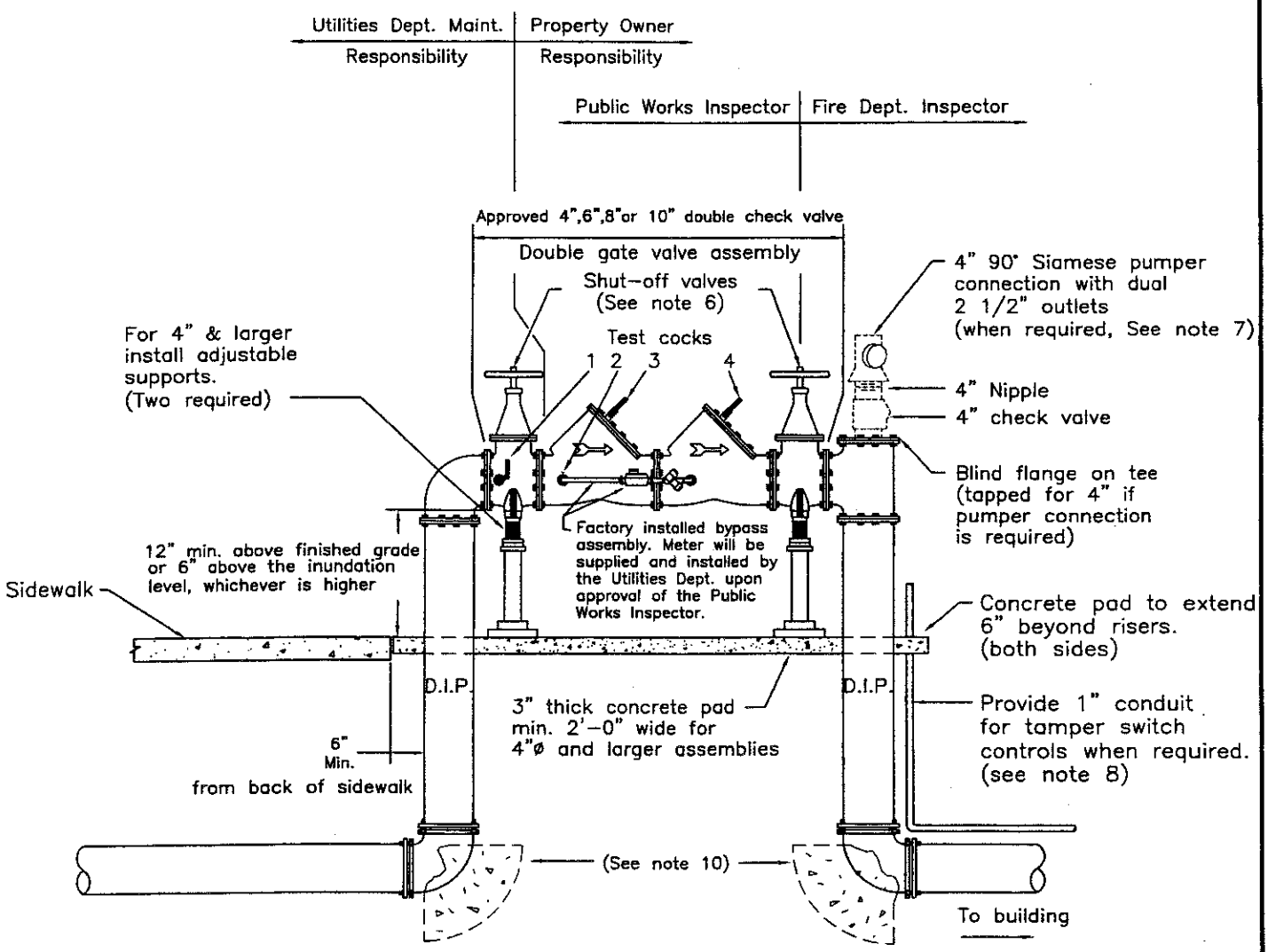

NOTES:

1. This Standard is required for:
   a.) all connections serving commercial fire sprinkler systems.
   b.) any fire line connections to properties with auxiliary water supplies.
   c.) sites with multiple fire line connections to the City water system.
2. Approved double check detector backflow assemblies shall be shown on "List of approved backflow devices" of latest revision, by the University of Southern California Foundation for Cross Connection Control & Hydraulic Research.
3. All test valves shall be fitted with 1/4" female test cocks.
4. Double check detector assembly shall be located as close as possible to the sidewalk or public right-of-way.
5. Any cover or screening for this assembly must have both Fire Department & Utility Department approval prior to installation.
6. Shut-off valves to be resilient wedge type O.S. & Y and will be chained and padlocked in the open position.
7. Must have specific approval of the Fire Dept. prior to installation.
8. The installation shall be provided with electronic supervision monitoring when required required by the Fire Department.
9. Double check detector shall be the same size as the fire line except when a 12" fire line is required, then a 10" double detector check backflow assembly is required.
10. Restrained joints are required for all new construction from gate valve to 90° ell. Thrust blocks are only required where existing services are being modified and restrained joints are not used.

CITY OF SANTA ROSA	
DOUBLE CHECK DETECTOR FIRE LINE BACKFLOW ASSEMBLY	
SCALE: NONE	DATE: Sept.2002
DWN: GC CHK:	APPROVED FILE NO. STD.- 880

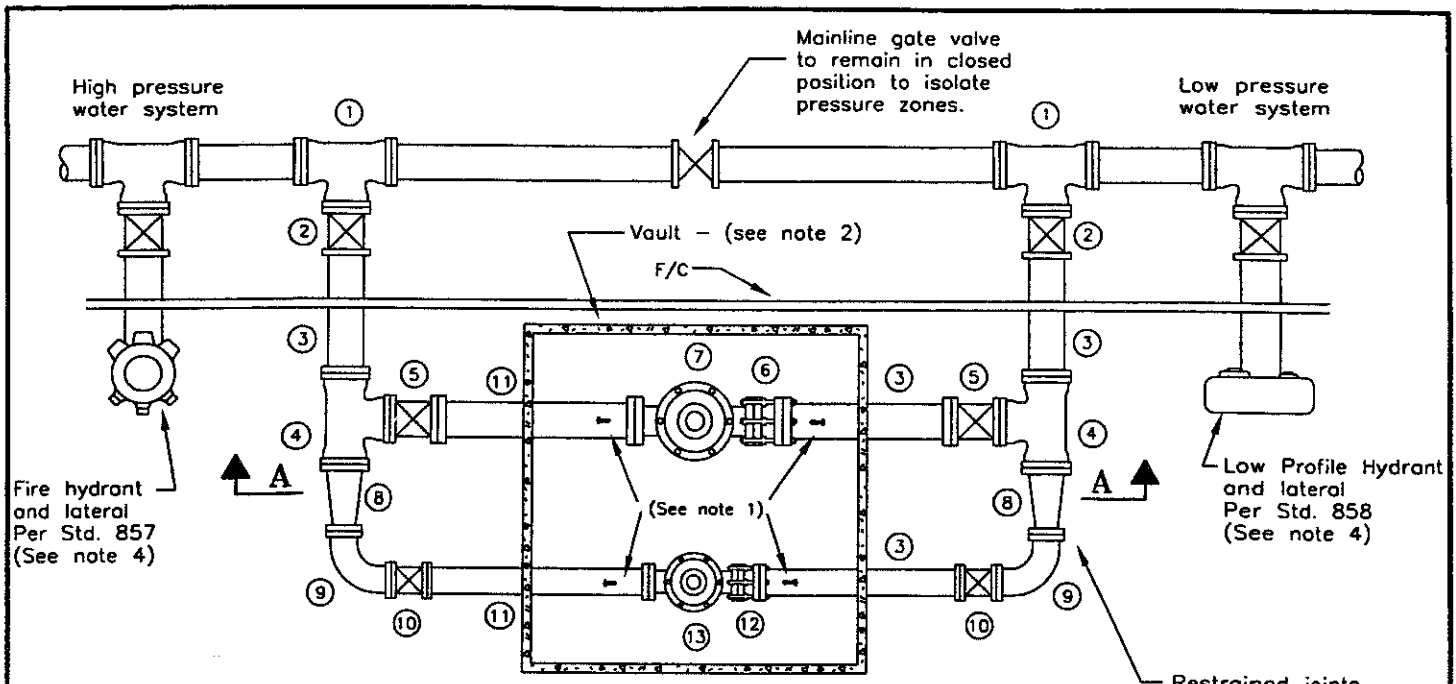

PLAN VIEW

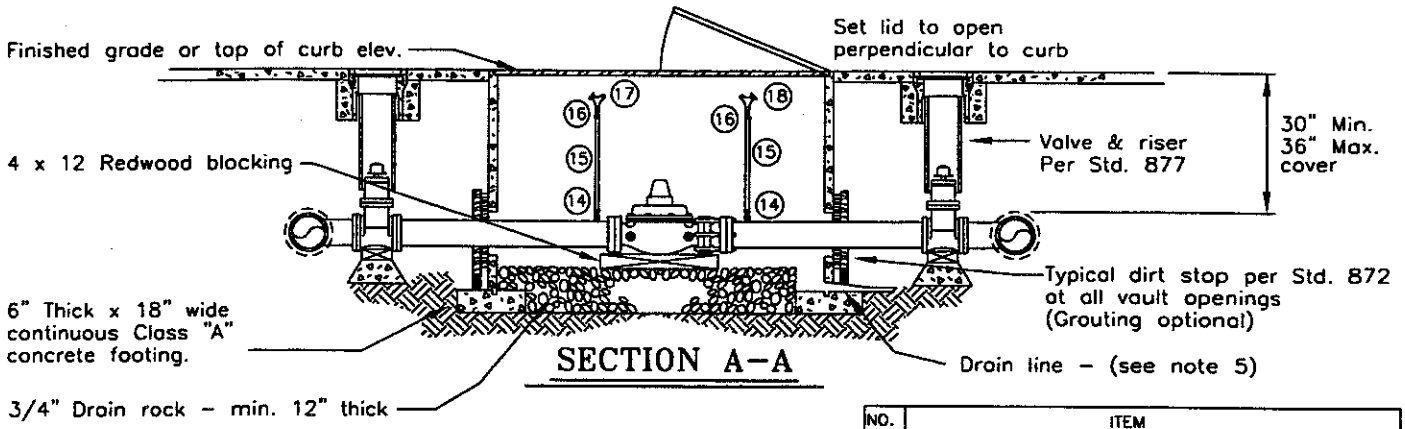

SECTION A–A

NO.	ITEM
1	MECHANICAL JOINT TEE
2	MECHANICAL JOINT GATE VALVE STD. 877
3	DUCTILE IRON PIPE – FL. X P.E.
4	FLANGED TEE
5	FLANGED GATE VALVE STD. 877
6	FLANGED COUPLING ADAPTER
7	FLANGED P.R.V. – HIGH FLOW
8	FLANGED REDUCER
9	FLANGED 90° ELL
10	FLANGED GATE VALVE STD. 877
11	DUCTILE IRON PIPE – FL. X FL.
12	FLANGED COUPLING ADAPTER
13	FLANGED P.R.V. – LOW FLOW
14	3/4" BALLCORP (FORD FB 1000)
15	3/4" TYPE "K" COPPER TUBING
16	3/4" COMP. X F.I.P. ADAPTER (FORD C14-33)
17	3/4" M.I.P X HOSE BIBB – BRASS
18	3/4" M.I.P. TEE WITH TWO (2) 3/4" F.I.P. X H.B.

NOTES:

1. Make 3/4" top tap – install risers as shown.
2. See the engineer's approved list for approved vaults and covers.
3. The low flow by-pass (part numbers 8–13) shall be installed unless otherwise approved by the Utilities Dept. and shall be a min. 4" in size. If a single P.R.V. is installed, center in vault and change parts Number 4 to 90° flanged ells, and delete part 5.
4. Install fire hydrant and low profile hydrant only when required by the City Utilities Dept.
5. 2" schedule 40 P.V.C. drain pipe shall be installed from a perforated sump canister to an existing drainage system or to daylight.
6. Valves 18" and larger shall be butterfly valves. Valves 16" and smaller shall be resilient wedge gate valves.
7. All pressure reducing valves to be epoxy fused, inside and outside. (See the engineer's approved list)
8. Restrained joints are required for all new construction from mainline gate valve to vault. Thrust blocks are only required where existing services are being modified and restrained joints are not used.

CITY OF SANTA ROSA

PRESSURE REDUCING VALVES

SCALE: NONE	DATE: Sept.2002	
DWN: TBM CHK: RLH	APPROVED	FILE NO. STD.- 881

NOTE: Surge anticipator valve installation is shown. Pressure relief valve installation is similar except no sensing line is required.

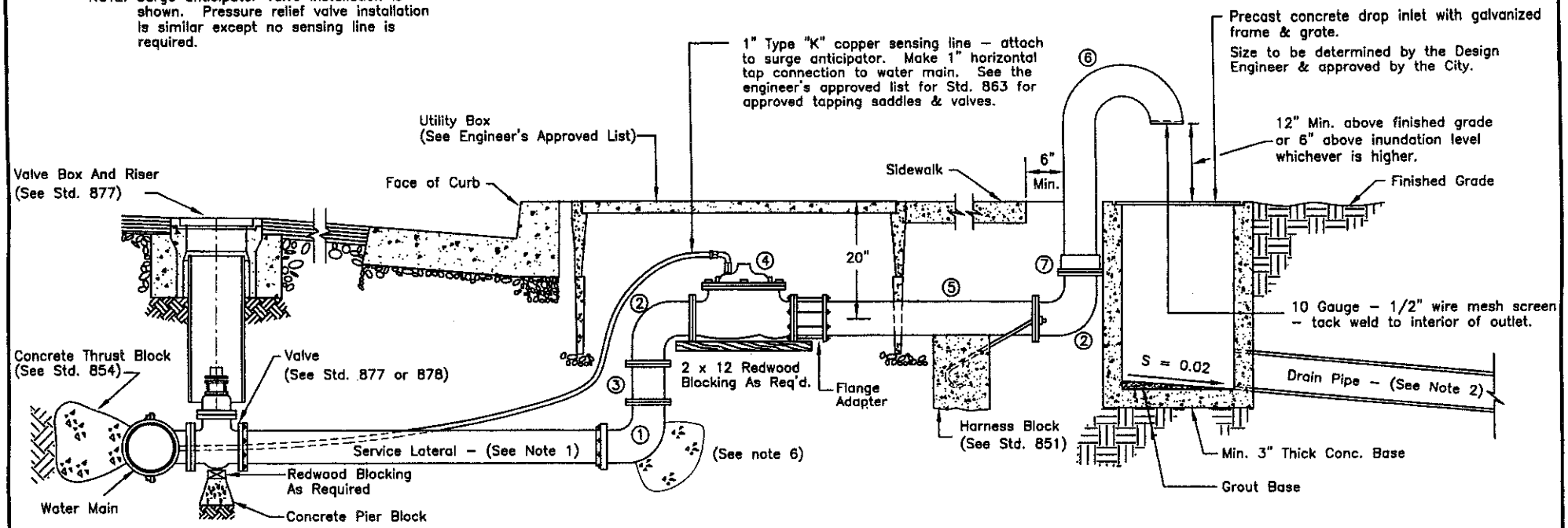

PARTS LIST	
NO.	ITEM DESCRIPTION
1	Flange x M.J. 90° – Size As Required
2	C.I. Fl. 90° Ell – Size As Required
3	D.I. Fl. Spool – Length As Required
4	Valve – See Engineer's approved list
5	Fl. D.I.P. – Length As Required
6	Fabricated Welded Steel Discharge (See Note 4)
7	Flange Adapter – Size As Required

NOTES

1. Service lateral pipe shall be either 4" diameter or equal in size to the surge anticipator valve, whichever is greater. The pipe material shall Be Cl. 50 or PC 350 Ductile Iron, unless otherwise shown on the plans. Should the surge anticipator valve be smaller than 4", install a flanged reducer as required on the inlet side of the valve.
2. Discharge water shall drain either to an existing drainage system or to daylight. The Project Engineer shall submit design to the appropriate agencies for approval.
3. All piping & fittings on the discharge side of the surge anticipator valve shall be equivalent in size to the valve.
4. Discharge riser shall be fabricated from standard welded steel pipe. Welding shall conform to AWWA Standard C206. The riser assembly shall be tape coated per AWWA Standard C209.
5. Contact the Utilities Dept. for specific telemetry requirements which must be met.
6. Restrained joints are required for all new construction from gate valve to lower 90° bend. Thrust blocks are only required where existing services are being modified and restrained joints are not used.

CITY OF SANTA ROSA

SURGE ANTICIPATOR VALVE or PRESSURE RELIEF VALVE

SCALE: NONE | DATE: Sept.2002

DWN: GC | APPROVED | FILE NO.

CHK: | STD.– 882

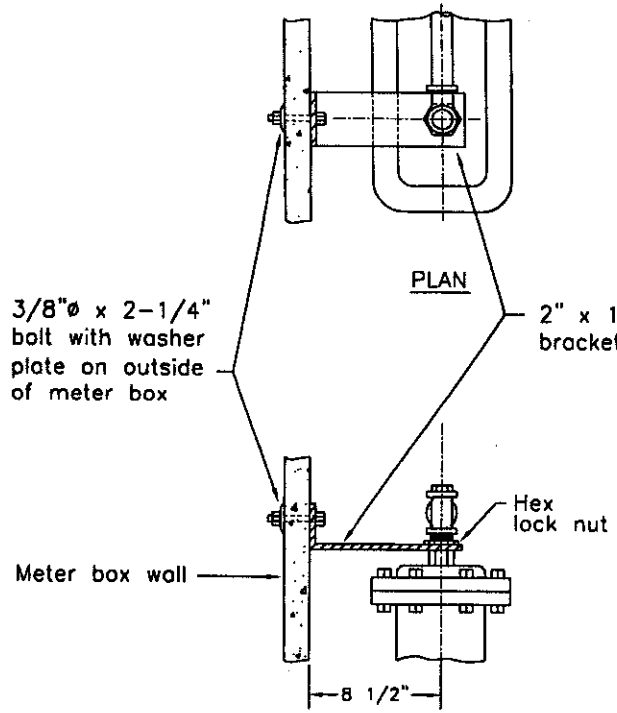

DETAIL OF BRACKET

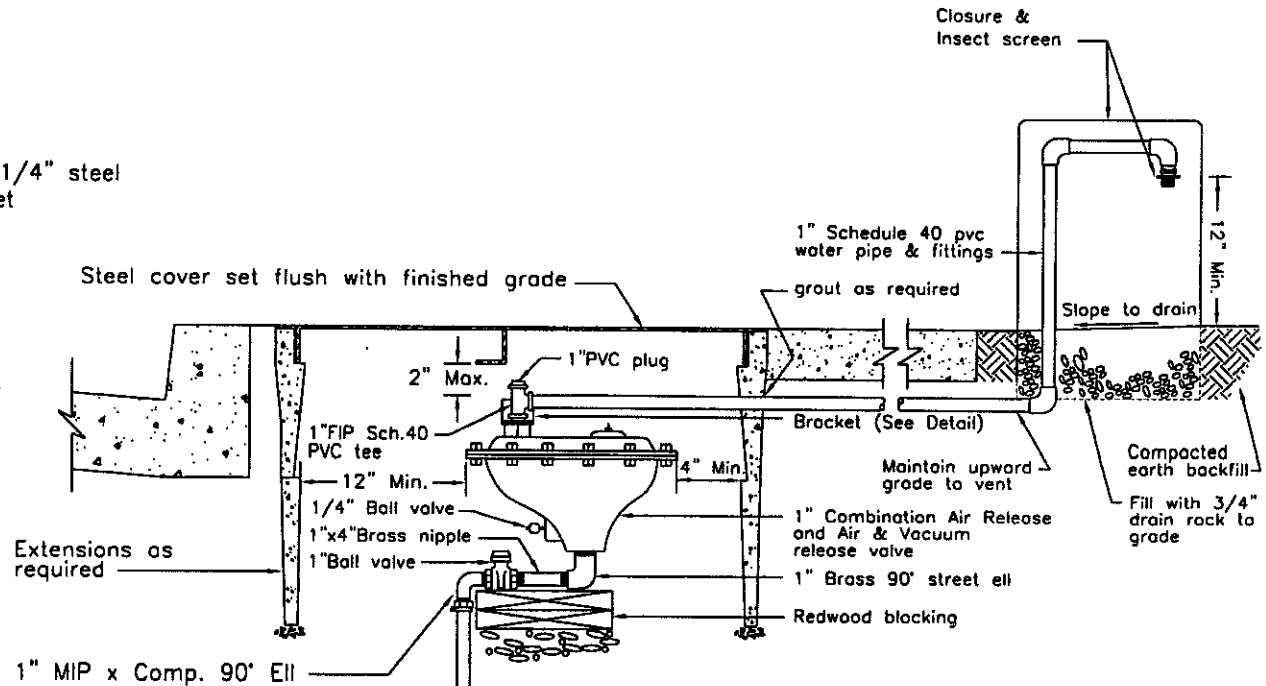

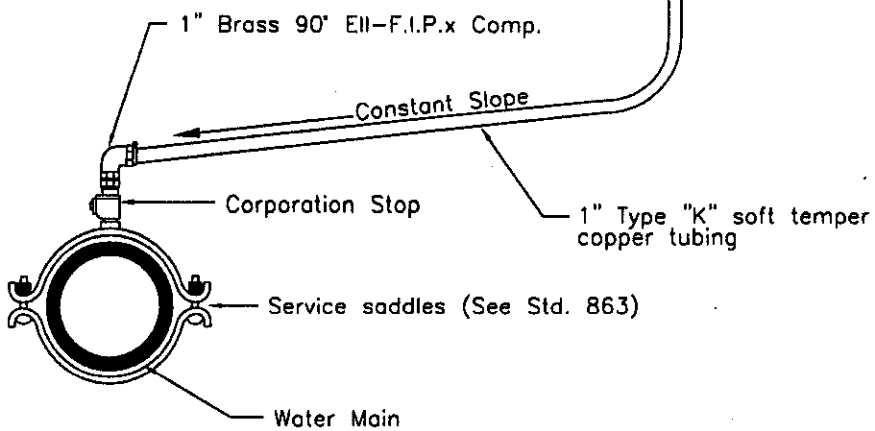

NOTES

1. Air Release Valves shall have 1" threaded inlets unless otherwise shown on plans.
2. See engineer's approved list for all parts.

CITY OF SANTA ROSA	
AIR AND VACUUM/AIR RELEASE VALVE	
SCALE: NONE	DATE: Sept.2002
DWN: GC	APPROVED
CHK:	STD.- 883

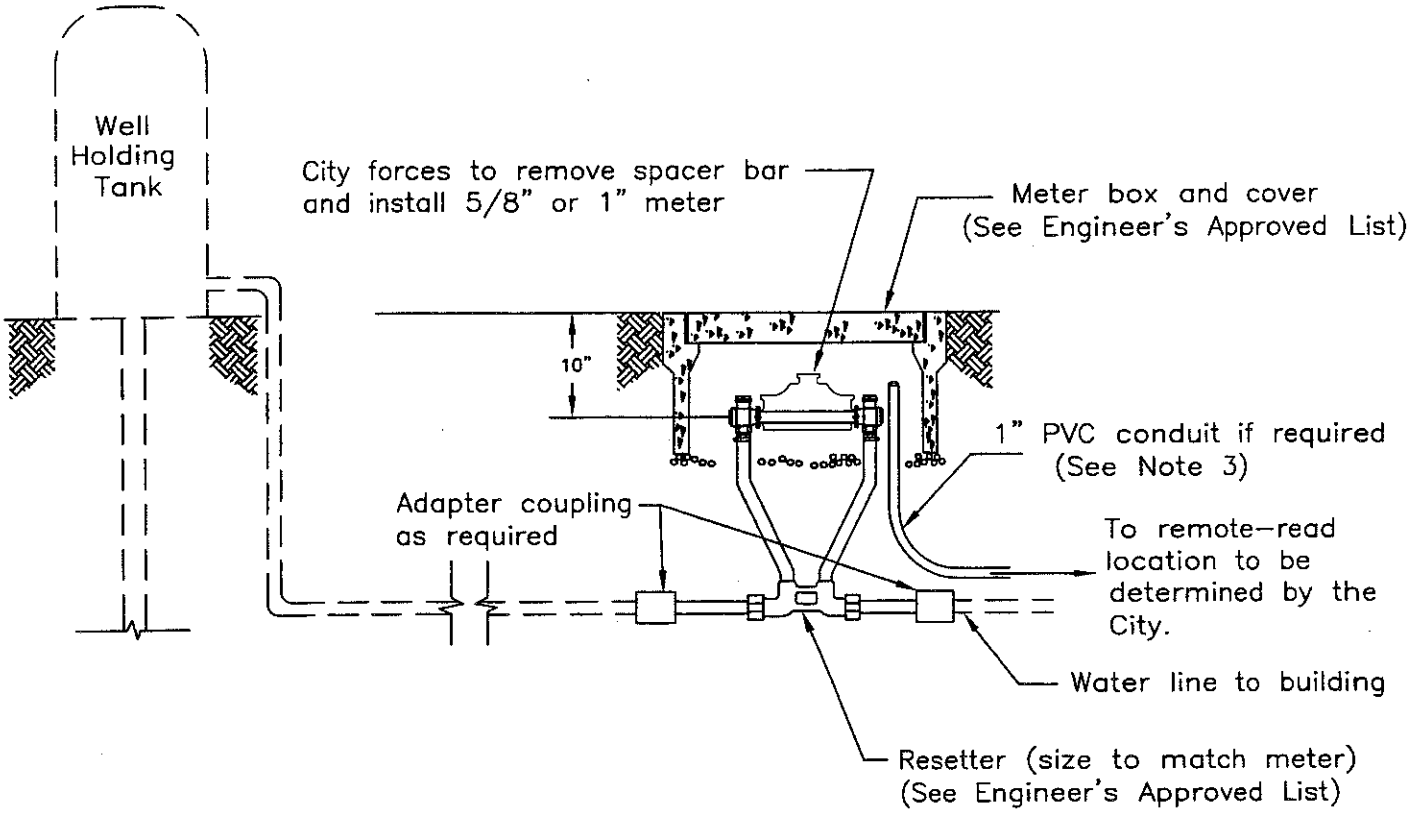

NOTES

1. Contractor to install schedule 80 PVC spacer bar—without holes.

2. All meter boxes, vaults and pits shall be bedded on 3" minimum thick, 3/4" drain rock, AB-2, or other clean material with typical sand equivalent of 20 minimum uncontaminated by native soil, against compacted or undisturbed base. The gravel bed shall extend to a 4" minimum beyond all sides of the meter box. Box shall set flush with the top of curb, sidewalk or ground, whichever is applicable.

3. 1" PVC electrical conduit with pull cable may be required where a remote-read meter is to be installed. Only long-radius ells may be used. Conduit installation to be inspected by the Utilities Department.

4. Location of meter requires prior approval by Utilities Department.

5. Meters larger than 1" requires prior approval by Utilities Department.

6. Traffic loading box and lid to be installed in all driveways or locations where vehicular traffic may occur, and where specified on plans. Box shall be installed so that the steel cover is set flush with finished surface.

CITY OF SANTA ROSA		
WATER METER for PRIVATE NON-RESIDENTIAL SYSTEMS		
SCALE: NONE	DATE: Sept.2002	
DWN: GC CHK: PM	APPROVED	FILE NO. STD.- 884

METER SETTING ASSEMBLY PARTS LIST

METER SIZE	RESETTER	SPACER BAR (See note 1)
5/8" x 3/4"	(See Engineer's approved list)	1"ø x 7-3/4" LG. SCHL. 80 PVC PIPE
1"	(See Engineer's approved list)	1-1/4"ø x 11" LG. SCHL. 80 PVC PIPE

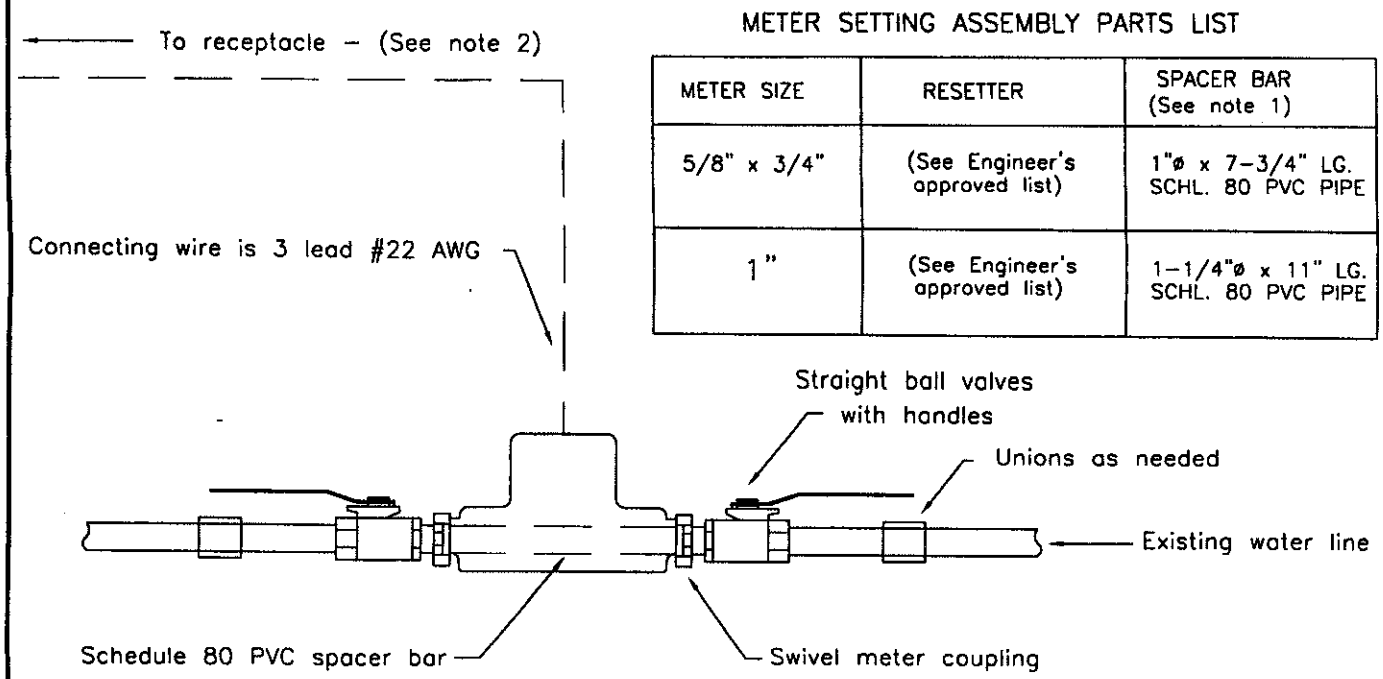

HORIZONTAL INSTALLATION

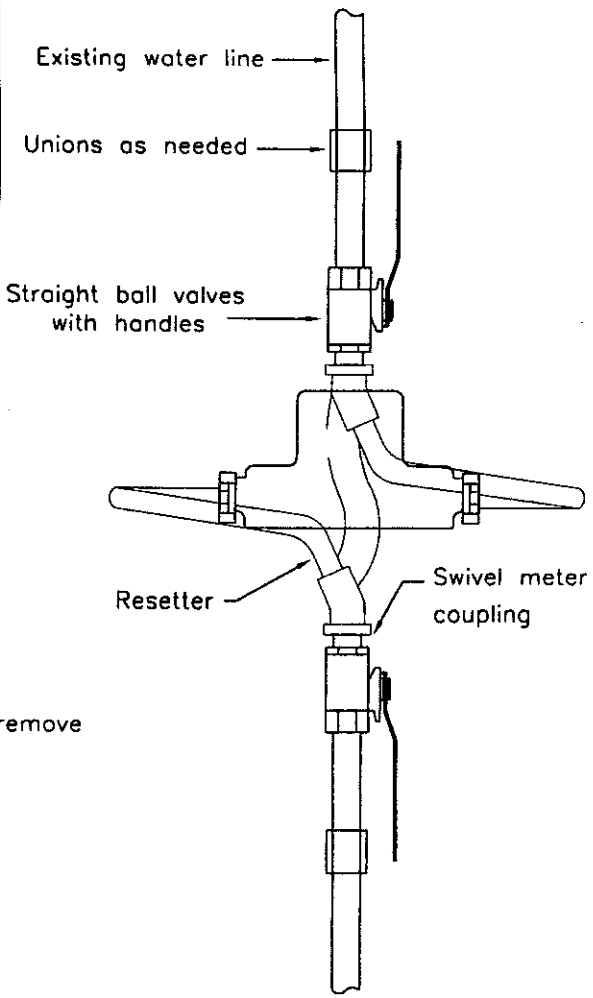

VERTICAL INSTALLATION

RESETTER REQUIRED

NOTES:

1. Spacer bar–without holes to be installed between ball valves. City Forces to remove spacer bar, install water meter and connect wiring.
2. Receptacle to be located on the outside wall of building. Receptacle to be mounted a minimum of 3 feet and a maximum of 4 feet above finished grade. The location of the receptacle will be determined by the Utilities Department.
3. Water meter must be mounted in a horizontal position. Water meter to be mounted a minimum of 3 feet and a maximum of 5 feet above finished floor. The location of the water meter will be determined by the Utilities Department.
4. Connecting wire to be installed in 1/2" diameter PVC conduit. Meter, conduit and wire may not be installed in areas with explosive atmospheres.
5. The Utilities Department will maintain the water meter only. All plumbing and wiring is the responsibility of the property owner.

CITY OF SANTA ROSA

WATER METER for PRIVATE PROCESS and EVAPORATIVE WATER LINES

SCALE: NONE | DATE: Sept.2002

DWN: RLH | APPROVED

CHK: G.C. | FILE NO. STD.-885

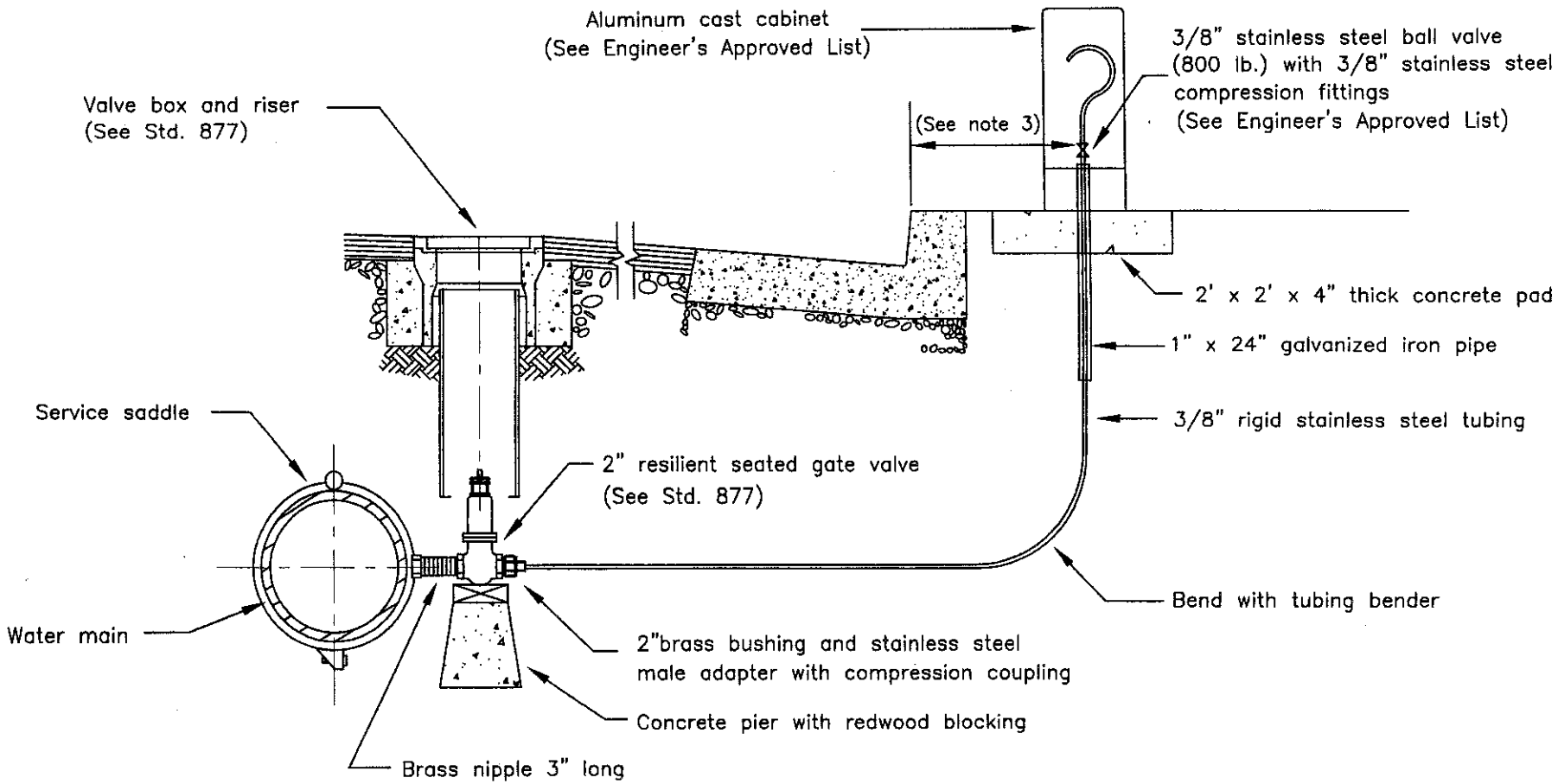

NOTES:

1. If more than one length of 3/8" stainless steel tubing is required stainless steel compression couplings shall be used.
2. All 3/8" tubing shall be wrapped in 10 mil tape.
3. Where planter strip exists, install min. 18" behind F/C – Where sidewalk is contiguous, install 12" behind sidewalk.

APPROVED TAPPING SERVICE SADDLES:

(See Engineer's Approved List for Standard 863)

CITY OF SANTA ROSA	
WATER SAMPLING STATION	
SCALE: NONE	DATE: Sept.2002
DWN: BLH	APPROVED
CHK: RLH	FILE NO.
	STD.– 886

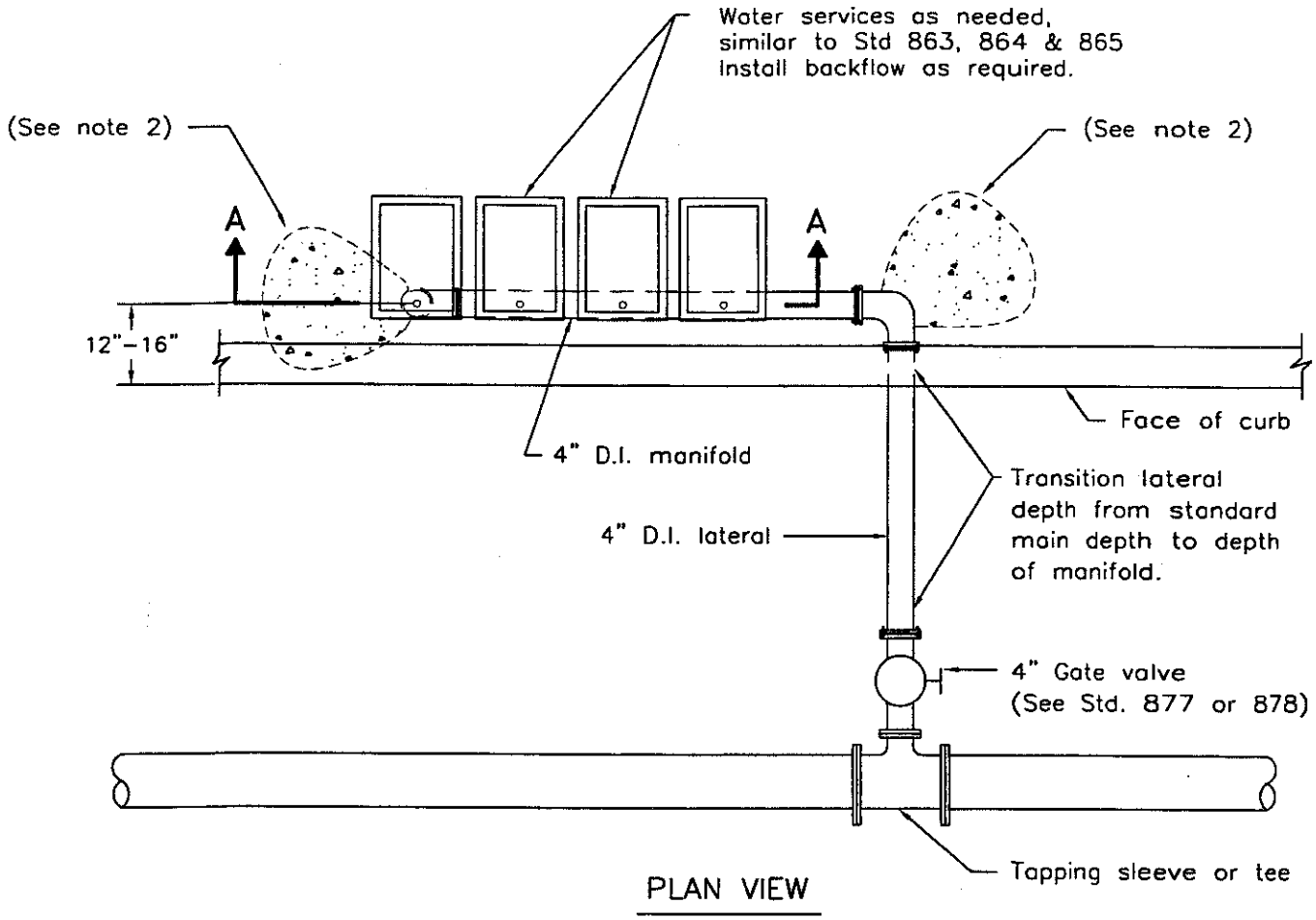

PLAN VIEW

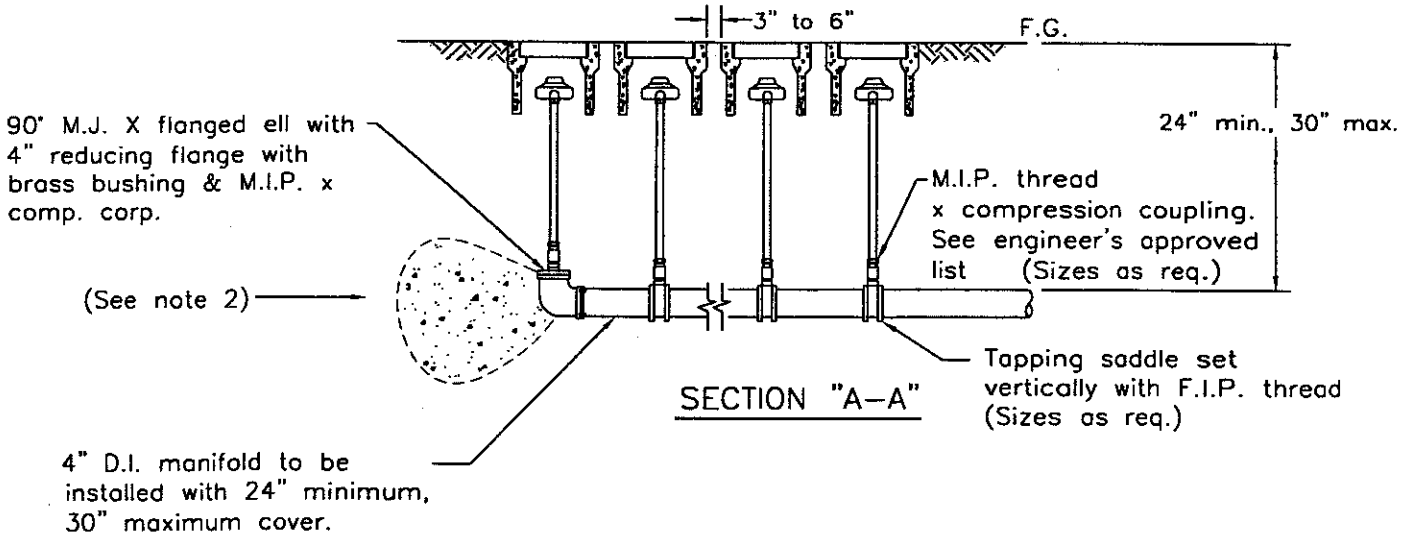

SECTION "A–A"

NOTES:

1. This Standard may be adapted for connection to a combination water service per Std. 870.
2. Restrained joints are required for all new construction from gate valve to end of 4" manifold. Thrust blocks are only required where existing services are being modified and restrained joints are not used.

CITY OF SANTA ROSA	
4" DUCTILE IRON MULTI–SERVICE MANIFOLD	
SCALE: NONE	DATE: Sept.2002
DWN: GC APPROVED CHK: G.C.	FILE NO. STD.- 887

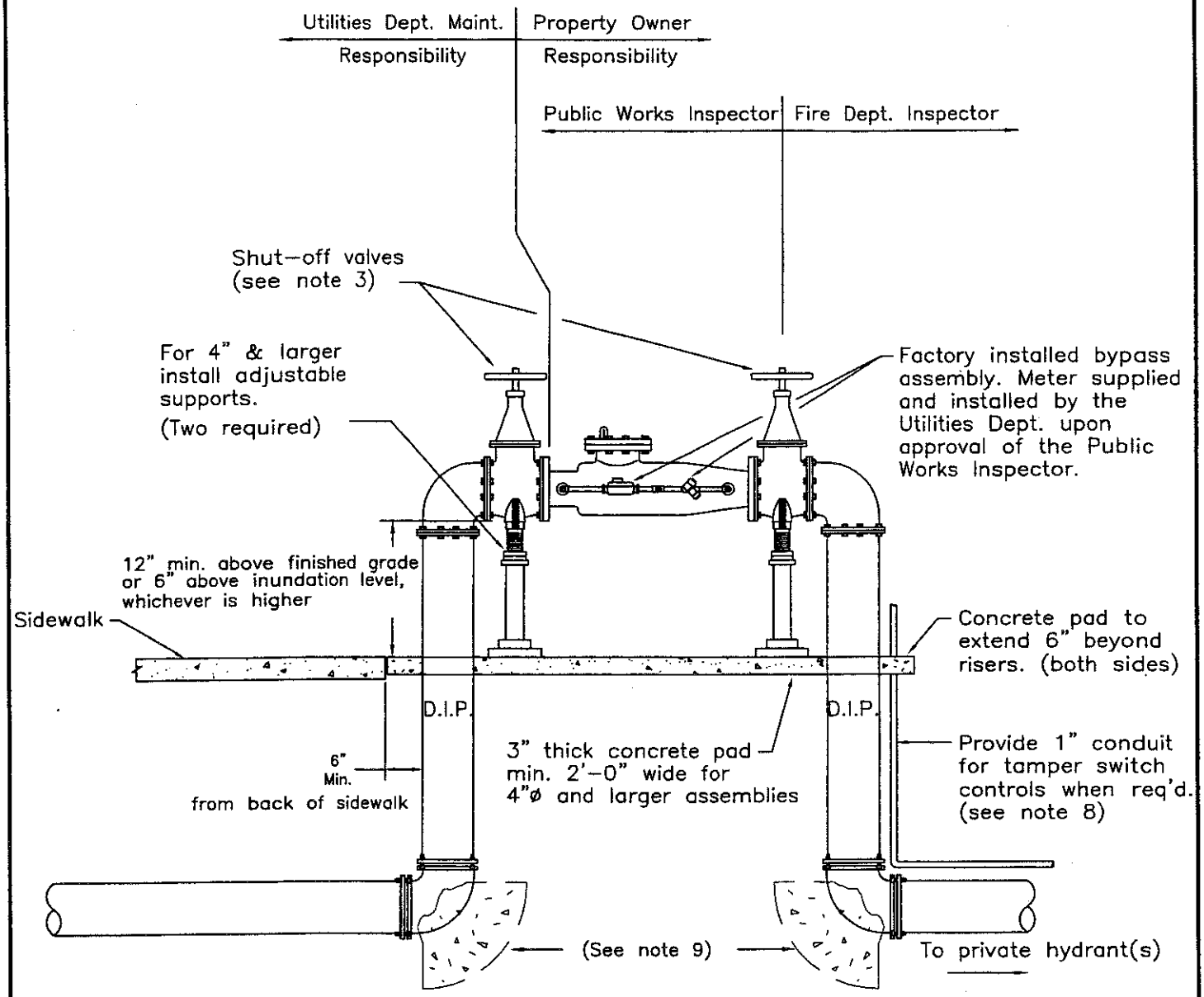

NOTES:

1. Above ground single check detector valve assemblies may only be used on fire lines serving private fire hydrants. Where sprinklers are served, use double check detector per Std. 880. When above ground installation is not possible due to site constraints, use single check detector in vault per Std. 879.

2. See Engineer's Approved list for Std. 879 for approved Detector checks.

3. Shut–off valves to be resilient wedge type O.S. & Y. and will be chained and padlocked in the open position.

4. All test valves shall be fitted with 1/4" female test cocks.

5. Detector check assembly shall be located as close as possible to the sidewalk or public right–of–way.

6. Any cover or screening for this assembly must have both Fire Department & Utility Department approval prior to installation.

7. Detector check shall be the same size as the fire line except a 10" detector check assembly is permitted when a 12" fire line is required.

8. The installation shall be provided with electronic supervision monitoring when required required by the Fire Department.

9. Restrained joints are required for all new construction from gate valve to 90° ell. Thrust blocks are only required where existing services are being modified and restrained joints are not used.

CITY OF SANTA ROSA		
ABOVE GROUND SINGLE CHECK DETECTOR ASSEMBLY		
SCALE: NONE	DATE: Sept.2002	
DWN: GC CHK:	APPROVED	FILE NO. STD.– 888

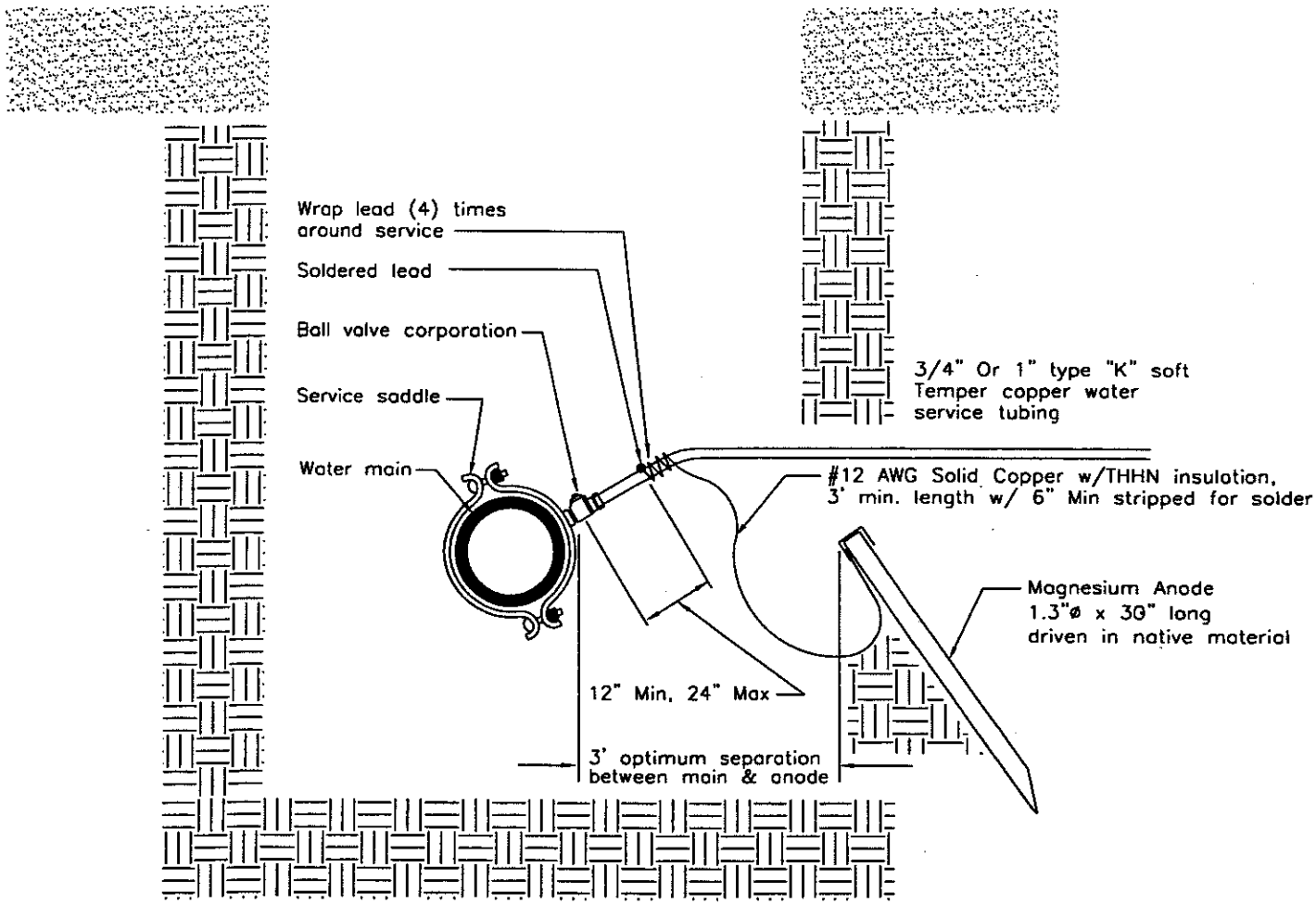

Structural Section

Native material

NOTES

1. Magnesium anode shall be driven completely into native soil at 45°. Maximize distance between copper service and anode.
2. Contractor shall confirm clearance between proposed anode location and other utilities in close proximity prior to driving anode.

CITY OF SANTA ROSA		
WATER SERVICE ANODE		
SCALE: NONE	DATE: Sept.2002	
DWN: TB CHK: RH	APPROVED	FILE NO. STD.- 889

3. WATER SYSTEM CONSTRUCTION STANDARD SPECIFICATIONS

SECTION 99. WATER MAIN CONSTRUCTION

99-1.01 Description

Construct all water mains and related appurtenances in accordance with the City of Santa Rosa Standard Plans and Standard Construction Specifications for Public Improvements.

99-1.02 Pipe

The pipe except where otherwise specified on the plans can either be Ductile Cast Iron or Polyvinyl Chloride (PVC) all in accordance with the following:

A. Ductile Iron Pipe shall be cement lined, new pipe conforming to AWWA Standard C151, pressure class 350. The pipe shall be furnished with either Bell and spigot end, "Tyton Joints" or Mechanical Joints except where otherwise specified on the plans.

B. Polyvinyl Chloride (PVC) Pipe shall be new pipe, minimum class 150, or as shown on the plans and conforming to the requirements of AWWA Standard C900 "Standard for Polyvinyl Chloride Pressure Pipe, 4 inch through 12 inch for Water". Polyvinyl Chloride (PVC) pipe for 16" diameter water mains shall be new pipe conforming to the requirements of AWWA standard C-905 DR-25, minimum pressure rating 165 or as shown on the plans.

   An affidavit shall be provided that all delivered materials comply with the requirements of AWWA Standard C900/C905 and these specifications.

99-1.03 Copper Water Service Tubing

All copper water service tubing shall conform with the latest AWWA Standards as described in ANSI/AWWA C800 of the latest revision, and with ASTM B88, and shall be Type K soft temper tubing for 3/4" and 1" tubing and Type K hard temper for 2" tubing.

99-1.04 Fittings

All fittings shall be new gray iron or ductile iron fittings conforming to ANSI/AWWA C110/A21.10 or new ductile iron compact fittings conforming to ANSI/AWWA C153/A21.53 of latest revision and shall be compatible with the type and pressure class of pipe used.

All exposed nuts, bolts and threads (except stainless steel) shall be painted with Bitumastic paint or approved equal after nuts are tightened.

99-1.04A Restrained Joint Fittings

Restrained joint fittings shall be ductile iron in accordance with the applicable requirements of ANSI/AWWA C111/A21.11 and ANSI/AWWA C153/A21.53 of latest revision and shall be compatible with the type and pressure class of pipe used.

99-1.05 Gate Valves

Gate valves shall conform to A.W.W.A. Standard C509 of latest revision and shall be the resilient seat type with non-rising stem opening counter-clockwise with O-ring stem seal and suitable ends for connection to the type of pipe or fitting used. The working pressure rating of gate valves shall meet or exceed the pressure rating of the pipe specified on the plans. External bolts and nuts shall be 304 stainless or poly wrapped per standard.

99-1.06 Butterfly Valves

Butterfly valves shall be flanged or mechanical joint type only and shall conform to AWWA Standard C504 of latest revision and shall be of the rubber seat type. Valve discs shall rotate 90 degrees from the full open position to the tight shut position. The valve seat shall provide a tight shutoff at a pressure differential of 150 p.s.i. upstream and 0 p.s.i. downstream in either direction. The valve operator shall be the traveling nut type. Valve shall open with a counter-clockwise rotation of the operating nut.

99-1.07 Valve Boxes, Vaults and Pits

Each gate valve shall be covered by a precast 8" valve box set flush with street surface with cast iron ring and cover marked "WATER".

All meter boxes, vaults and pits shall be bedded on 3" minimum thick, 3/4" drain rock, or other clean material with typical sand equivalent of 20 minimum, uncontaminated by native soil, against compacted or undisturbed base. The gravel bed shall extend to a 4" minimum beyond all sides of the meter box. Box shall be set flush with top of curb, sidewalk or ground, whichever is applicable. Addresses must be clearly marked on top side lip of meter box with a permanent marking pen.

Meter boxes and vaults shall be set so that the reading lids are aligned over the meter registers as closely as possible.

99-1.08 Locating and Adjusting Water Valve Boxes

After a street has been paved, mark the location of all water valve boxes in white paint before the close of that work day.

Within 48 hours of paving, adjust all water valve boxes up to grade.

99-1.09 Fire hydrants and Lateral Assembly

At the location(s) shown on the plans, the Contractor shall provide and install a fire hydrant and lateral assembly in accordance with City Standard 857.

No bends are allowed in fire hydrant laterals without approval of the Director of Utilities.

Fire hydrants serving one and two family residential use have one 2-1/2 inch outlet and one 4-1/2 inch outlet. Fire hydrants serving commercial and multi-family residential uses have one 2-1/2 inch outlet and two 4-1/2 inch outlets.

Paint all hydrants in accordance with City Standard 857.

Before a public fire hydrant may be placed in service, a high velocity flushing of the hydrant lateral shall be witnessed and approved by Utilities Department personnel.

99-1.10 Asbestos Cement Pipe

The installation of asbestos cement pipe is prohibited.

All cutting, handling and disposal of asbestos cement pipe shall be done in compliance with the Contractor's State Licensing Law and all applicable laws and regulations.

99-1.11 Excavation, Backfill, and Resurfacing

All trenching, backfill and resurfacing required for installation of water system facilities shall be in accordance with City Standard 215.

All stumps and large roots encountered during trenching operations shall be removed to the satisfaction of the Engineer.

The trench shall be opened sufficiently ahead of the pipe laying operations to reveal obstructions. Trench crossings shall be provided as necessary to accommodate public travel and to provide convenient access to adjacent properties. Flow shall be maintained in any sanitary sewers, storm drains, water lines, or water courses encountered in trenching.

When the public works involved will exceed an estimated $25,000 for the excavation of any trench or trenches five feet or more in depth, the Contractor shall, except for subdivisions, submit to the City Engineer for acceptance in advance of job excavation, a detailed plan showing the design of shoring, bracing, sloping, or other provisions to be made for worker protection from the hazard of caving ground during the excavation of such trench or trenches. If such plan varies from the shoring system standards established by the construction safety orders, the plan shall be prepared by a registered civil or structural engineer. A permit to do the above described work must be obtained from the State of California, Division of Industrial Safety. Proof of such permit shall be submitted to the Engineer prior to starting the trench work.

Excess Material from excavation shall become the property of the Contractor and shall be disposed of to the satisfaction of the Engineer. Prior to disposal of any materials or operation of any equipment on sites provided by the Contractor for disposal of excess trench excavation owned by him, the Contractor shall submit to the Engineer written authorization for such disposal of materials and entry permission signed by the owners of the disposal site and the required permits.

99-1.12 Laying and Handling Pipe Materials

Proper implements, tools, and facilities satisfactory to the Engineer shall be provided and used by the Contractor for safe, convenient, and workmanlike prosecution of the work.

Start excavation by exposing end of existing pipe to determine its line and grade. Start laying new pipe 8-10 feet from the existing and install new pipe at or below the minimum depth specified in Section VIII-B of the Water System Design Standards. Elbows and ductile iron pipe shall be used to make grade adjustments as needed during tie-in operations.

All pipe fittings and valves shall be carefully lowered into the trench in such a manner as to prevent damage to pipe coatings. Under no circumstances shall pipe or accessories be dropped or dumped into the trench. Before lowering and while suspended, the pipe shall be inspected for defects and the cast iron pipe rung with a light hammer to detect cracks. Any defective, damaged, or unsound pipe shall be rejected and sound material furnished. Cutting of pipe for inserting valves, fittings, or closure pieces shall be done in a neat and workmanlike manner without damage to pipe. All pipe stockpiled on the job shall be stored with the ends covered to prevent the entrance of foreign matter.

Whenever it is necessary either in vertical or horizontal plane, to avoid obstructions or when long radius curves are permitted, the amount of deflection shall not exceed the maximum recommended by the pipe manufacturer or that required for satisfactory jointing.

Each length of pipe shall be free of any visible evidence of contamination, dirt, and foreign material before it is lowered into its position in the trench, and it shall be kept clean by approved means during and after laying. At times when pipe laying is not in progress, the open ends of any pipe which have been laid shall be closed by approved means to prevent the entrance of small animals or foreign material. Trench water shall not be permitted to enter the pipe.

99-1.13 Laying P.V.C. Pipe

Individual pieces of pipe, valves, and fittings shall be joined by placing the rubber rings on the machined ends of the pipe and pulling the couplings, valves, or fittings in accordance with the manufacturer's recommendations. The rings shall be checked to be sure they are in the proper position after the coupling is in place. Care shall be taken to insure proper seating of the rings, and adapters shall be utilized for connections as required by the manufacturer.

Fittings for P.V.C. pipe shall be either the mechanical joint type or push-on type.

No. 12 insulated copper wire shall be laid on top of and along entire length of all new pipes and shall be extended to the surface at all valve locations, blowoffs and meter boxes sufficiently for locator equipment to be attached. Fasten the wire to the top of the pipe so as not to be displaced by backfilling procedure (one method of accomplishing this is to affix the wire to the top of the pipe with duct tape at approximately 10 feet intervals).

99-1.14 Laying of Ductile Iron Pipe

Ductile iron pipe shall be as specified in and installed per AWWA C600 of latest revision and in accordance with the manufacturer's recommendations.

The flame cutting of pipe by means of oxyacetylene torch is not allowed.

99-1.15 Service Laterals

Service laterals other than those shown or noted on the plans shall not be installed prior to obtaining City approval. Service laterals encountered in construction that will not be used shall be abandoned.

99-1.16 Thrust Blocking

Except for restrained joint pipe systems, all tees, bends, and plugs shall be provided with thrust blocks and/or harness as shown on the plans or in accordance with City Standards 853 and 854.

99-1.17 Abandoning Water System Components

For all abandoned water services up to and including 2", remove the valve and saddle and install a full circle clamp on the main under Utilities Department inspection.

For flanged or mechanical joint tees, remove the valve and install a blind flange or mechanical joint plug under Utilities Department inspection.

For push on tees, the tee, valve and concrete thrust block must be removed and the main repaired with approved pipe and suitable couplings.

99-1.18 Hydrostatic Test

The test shall be performed after the water system has been laid and all backfill placed and compacted as specified elsewhere in these specifications. The Contractor, at his option, may test the pipe at any time during construction. However, the final test for acceptance shall be made only after all backfill is in place.

Pressure testing against valves is not allowed unless authorized by the Director of Utilities.

Valves on existing pipes in service shall be operated only by City forces.

Each section of pipe shall be slowly filled with water and the specified test pressure shall be applied by means of a pump connected to the pipe in a satisfactory manner. The pump, pipe connection, and all necessary apparatus except gauge and measuring devices shall be furnished by the Contractor. The City of Santa Rosa will furnish the gauge and measuring devices for the test. The Contractor shall make the taps into the pipe and shall furnish all necessary assistance for conducting the tests. Before applying the test pressure, all air shall be expelled from the pipe. To accomplish this, taps shall be made, if necessary, at the points of the highest elevation, and afterwards tightly plugged.

Each valved section of pipe, or combined sections, as approved by the Engineer, shall be subjected to a hydrostatic pressure of not less 50 psi above working pressure and not less than 150 psi at any point on the pipe. The duration of each pressure test shall be thirty minutes. Suitable means shall be provided by the City for determining the quantity of water leakage under the test pressure. No pipe installation will be accepted until or unless this leakage is less than 40 U.S. gallons per 24 hours, per mile of pipe, per inch nominal diameter of pipe. Should any test of combined or individual sections of pipe disclose leakage greater than the specified limit, the Contractor shall, at his own expense, locate the cause and repair the defect until the leakage is within the specified allowance.

Leakage is defined as the quantity of water to be supplied into the newly laid pipe, or any valved section of it, necessary to maintain the specified leakage test pressure after the pipe has been filled with water and the air expelled. The Engineer shall designate the time at which the tests shall be made.

The Contractor shall repair any obvious leaks even though the hydrostatic test results are within the prescribed limits above.

99-1.19 Chlorination of Pipeline

Chlorine may be applied by any of the standard methods, subject to the approval of the Engineer. The point of application of the chlorination agent shall be at the beginning of the pipe extension, or any valved section of it, and through a corporation stop inserted in the newly laid pipe.

Water from the existing distribution system shall be controlled to flow very slowly in the newly laid pipe during the application of chlorine. Precautions shall be taken to prevent back pressure causing a reversal of flow into the pipe being treated. In the process of chlorinating, all valves and other appurtenances on the new pipe shall be operated in such a way as to provide that the chlorine mixture shall be fully distributed to all parts of the new water system. Valves on existing pipes in service shall be operated only by City forces.

The rate of chlorine feed shall be in such proportion to the rate of

water entering the pipe that the chlorine dose applied to the water entering the newly laid pipe shall be at least 100 ppm. The chlorine mixture shall be retained in the pipe for a period of twenty-four hours. After the chlorine mixture has been retained for the required time, the chlorine residual at the pipe extremities and at representative points shall be at least 5 ppm.

Following chlorination, all chlorine mixture shall be thoroughly flushed from the new pipe.

Chlorinated water used to disinfect the pipe is the property of the Contractor and its disposal is the responsibility of the Contractor. Chlorinated water used to disinfect the pipe shall be disposed of in accordance with all laws and regulations.

The following criteria must be met prior to disposal of chlorinated water to storm sewers or other inland waterways:

(1) Water to be disposed of must contain no chlorine residual.

(2) pH must be between 6.5 and 7.5.

(3) North Coast Regional Water Quality Control Board, at 576-2220, must be notified of discharge.

Discharges not meeting the above criteria may be allowed to be disposed of into the sanitary sewer system, but must first meet the following requirements:

(1) The Contractor must obtain permission from the City of Santa Rosa Utilities Department Industrial Waste Section, 543-3369, prior to the discharge being disposed of in the sanitary sewer system. The payment of any fees required will be the responsibility of the Contractor.

(2) The pH of the water must be between 6.0 and 9.5.

Should the initial treatment, in the opinion of the Engineer, prove ineffective, the chlorination procedure shall be repeated until confirmed tests show that the water sampled from the newly laid pipe conforms to the above requirements.

The initial bacteria samples will be taken and tests made by the City of Santa Rosa. There shall be a 24 hour waiting period after blowing off the pipe prior to taking bacteria samples. If the initial bacteria test fails, two consecutive passing bacteria tests must be obtained prior to making the tie-in. The City will pay for retesting up to ten additional individual bacteria sample tests. If additional testing is required, it will be necessary for the contractor to arrange for and to pay for the tests at a State of California certified laboratory. In extreme cases, at the discretion of the Engineer it may be necessary to require, at the contractor's expense, a complete Title 22 potable water test prior to tie-in.

Bacteria tests are valid for 30 days. If there is more than a 30 day lapse between a bacteria test and the applicable tie-in, the bacteria test must be repeated prior to performing the tie-in.

99-1.20 Water Main Connection Work

Upon completion of construction, final connection will be made by the Contractor under inspection by City Utilities Department Representative, unless otherwise specified on the plans.

The Contractor shall notify the City inspector 48 hours prior to individual mainline shutdowns required to facilitate a tie-in. The contractor shall schedule tie-in work with the Engineer and with the City Utilities Engineering Division at (707) 543-3950. Tie-ins will not be scheduled until a written passing bacteria test has been received by Utilities Engineering. All shutdowns and valve turning operations shall be performed by City Utilities personnel only. A Utilities Department Inspector must be present during all tie-in operations. No tie-ins shall be performed without prior authorization of the Engineer.

Contractors or parties who fail to keep field appointments shall be billed for scheduled Utilities Crew waiting or standby time which was used and the contractor shall bear the costs incurred by the Utilities Department for notification of its customers for the subsequent appointment.

As a general rule, customer service shall not be terminated or interrupted on Mondays.

Interruption of service to commercial customers shall, as much as practical, be coordinated with the customer's needs. The Utilities Department will contact the customers, consider the customer's interests and inform the Contractor accordingly.

After hours work or weekend work is to be avoided whenever possible and any overtime costs shall be borne by the contractor requesting such after hours work. Normal working hours are: 7:00 A.M. to 3:30 P.M.

Contractors or parties requiring work of any kind by the Utilities Department forces shall request such services a minimum of 48 hours in advance of the time such services are desired. Work requests, which will involve Utilities Department forces for more than 8 hours or an extensive number of City supplied parts, shall be requested a minimum of 7 calendar days in advance.

If it is necessary to terminate service to any customer, the contractor shall make the request for such work an additional 72 hours (three additional working days for a total of five working days advance notice) in advance of the time such services are desired to allow the customers affected to have a minimum 72 hour notice.

When installing a cut-in-tee that is larger than the existing pipe, the new assembly must be installed at the depth sufficient to allow the valve to remain below the subgrade of the street which may necessitate lowering the existing pipe.

When a connection is required to an existing water pipe, the contractor shall provide all excavation, shoring, backfill and trench resurfacing per City Standard 215. Where the connection is to be a "hot tap", the contractor shall provide and install the tapping valve and sleeve, and any other hardware required and City forces will make the tap at the developer's expense. When any joint on an existing water pipe is disturbed, that joint and any proposed hot tap 4" and larger shall be replaced with a "cut-in" tee. When a "cut-in" tee and valve(s) assembly is required on the plans, the contractor shall provide and install the entire assembly (including valves), and any other hardware necessary under City Utilities Department inspection, and shall provide all other work and materials necessary to complete the installation to City Standards.

During the work, the Contractor shall exercise all necessary precautions to prevent the entrance of trench water or any other foreign material into the water main and shall conduct all operations in accordance with the most stringent sanitation practices. The interior of all appurtenances being installed shall be thoroughly swabbed with a strong HTH solution prior to installation.

Tie-in or cut-in tee connections to cast iron, PVC, or ductile iron pipes shall be made with mechanical joint solid sleeves. Flexible connections shall only be used when connecting to asbestos cement pipe.

Pipe and fittings furnished for tie-ins shall be no smaller than the existing water main to which each tie-in is made.

99-1.21 Water System Component Reporting

The Contractor shall submit the material type, manufacturer and model number of all water system components to the City inspector prior to final testing.

99-1.22 Construction Water

Unmetered connections are not permitted to the City of Santa Rosa water system, including connections bypassing meter for testing onsite plumbing or for obtaining construction water. When a subdivision water main has been accepted and tied-in the individual curb stops will be locked off with cable ties. Cutting off or tampering with the cable ties will constitute a straight tie-in connection. Such connections will be severed by the Utilities Department and will result in penalties including payment of fines and estimated water usage fees.

Construction water shall be obtained from the City water system only at the point(s) designated by the Engineer.

The contractor must possess a valid Water Use Permit issued by the

Utilities Department for each metered construction water connection.

A deposit for each meter will be required which is refundable upon removal of the meter by City forces, less any charges for water used.

Contractors are prohibited from operating gate valves or fire hydrants on the City system.

Use of water obtained from unmetered fire hydrants or other facilities is a violation of City ordinance and State law. Use of construction water from sources other than the City Water System must be approved by Engineer.

U:\Eng\Specifications\water\waterspec9-2002.wpd

4.

ENGINEER'S LIST OF APPROVED ITEMS
FOR USE WITH WATER SYSTEM CONSTRUCTION
STANDARDS APPROVED SEPTEMBER 2002

EFFECTIVE: **OCTOBER 2002**

Standard 857 - Fire Hydrant and Lateral

Hydrants

Residential
(All 1-2½" & 1-4½" outlet)

Clow	F-75
Clow	F-950

Commercial
(All 1-2½" & 2-4 ½" outlet)

Clow	865

Hydrant Break-Off Check Valve Assembly

Clow	#40
Long Beach	LB400

Coatings

Benjamin Moore & Co.	DTM Acrylic Gloss Enamel, M28
Kelly Moore	DTM Acrylic Gloss Enamel, 5780
Sherwin Williams	DTM Acrylic Coating, B66-100

Standard 858 - Typical Pumper Connection Detail

Low Profile Hydrant
(1- 2½" & 1-4½" outlet)

Clow	F-94

Hydrant Break-Off Check Valve Assembly (see Std 857)

Clow	#40
Long Beach	LB400

Coatings

Benjamin Moore & Co.	DTM Acrylic Gloss Enamel, M28
Kelly Moore	DTM Acrylic Gloss Enamel, 5780
Sherwin Williams	DTM Acrylic Coating, B66-100

Standard 861 - Blow-Off With Harness

2" Brass Ball Valve (FIP X FIP)

Ford	B11-777W
Jones	J-1900W
McDonald	6101W
Mueller	B-20200

3" Brass Ball Valve

Watts	Series B-6000

Boxes & Covers

Size	Location	Box Number	Cover Number
2" & 3"	Traffic	Christy B1324	Christy B1324-61JH
2" & 3"	Nontraffic	Christy B30 Quazite PG1324BA12	Christy B30D Quazite PG1324WA50

Standard 862 - 8" Blow-off

2" Brass Ball Valve (FIP X FIP)

Ford	B11-777W
Jones	J-1900W
McDonald	6101W
Mueller	B-20200

3" Brass Ball Valve

Watts	Series B-6000

Boxes & Covers

Size	Location	Box Number	Cover Number
8"	Traffic	Christy B2436 Quazite PG2436BA18	Christy B2436-62JH Quazite PG2436WAP250
8"	Nontraffic	Christy B40 Quazite PG2436BA18	Christy B40D Quazite PG2436WAP250

Standard 863 - 3/4" & 1" Water Service Lateral For 5/8" x 3/4" & 1" Meters

Angle Meter Ball Valve-Street Side (Compression x Meter Swivel Nut) 3/4" or 1"

Ford	BA43-332W-Q - 3/4"
	BA43-444W-Q - 1"
Jones	J-1963WSG
McDonald	4602BQ
Mueller	B-24258

Angle Meter Ball Valve-Property Side (FIP x Meter Swivel Nut) 3/4" or 1"

Ford	BA13-332W-Q 3/4"
	BA13-444W-Q 1"
Jones	J-1966W
McDonald	4604B
Mueller	B-24265

Corporation Stop (AWWA/CC Taper Thread Inlet x Compression CTS) 3/4" or 1"

Ford	FB1000-3-Q - 3/4"

	FB1000-4-Q - 1"
Jones	J-3401SG
McDonald	4701BQ
Mueller	B-25008

Tapping Service Saddle

C-900 Pipe

Ford	202BS
	FC202
	FS303
Jones	J969
McDonald	3845 & 3846
Mueller	DE 2 S Series
	BR 2 S Series
Romac	202B
	202N
Smith-Blair	317
	393

Ductile Iron Pipe

Cascade	CS22
Ford	FC202
	FS303
McDonald	3825 & 3826
Mueller	DE 2 S Series
	BR 2 S Series
Romac	202B
	202N
Smith-Blair	317

Existing ACP

Ford	FC202
McDonald	3825 & 3826
Mueller	DE 2 S Series
	BR 2 S Series
Romac	202N
Smith-Blair	317

Meter Boxes and Covers

Size	Location	Box Number	Cover Number
5/8" x 3/4"	Traffic	BES C1017 Christy B1017 Quazite PG1324BA12	BES C1017GH Christy B1017-61GH Quazite PG1324HAP250
5/8" x 3/4"	Traffic *Probe	BES C1017 Christy B1017 Quazite PG1324BA12	*BES C1017GH *Christy B1017-61GH Quazite PG1324HAP250
5/8" x 3/4"	Nontraffic	Christy B12 Quazite PG1324BA12	Christy B12C Quazite PG1118WA050 Quazite PG1324WAP250
5/8" x 3/4"	Nontraffic *Probe	Christy B12 Quazite PG1324BA12	Christy B12PCW *Quazite PG1118WA050 *Quazite PG1324HAP250

1"	Traffic	BES C1324 Christy B1324 Quazite PG1730BA12	BES C1324GH Christy B1324-61GH Quazite PG1730HAP250
1"	Nontraffic	BES C30 Christy B30 Quazite PG1730BA12	BES C30E Christy B30E Quazite PG1324WAP250 Quazite PG1730WAP250
1"	Traffic *Probe	BES C1324 Christy B1324 Quazite PG1730BA12	*BES C1324GH *Christy B1324-61GH *Quazite PG1730HAP250
1"	Nontraffic *Probe	BES C30 Christy B30 Quazite PG1730BA12	BES C30PEW Christy B30PEW *Quazite PG1324WAP250 *Quazite PG1730WAP250

*Probe - 1 3/4" hole in meter box cover.

Standard 864 - 1" Dual Water Service Lateral

U-Branch Assembly (Compression x MIP)

Ford	UVB43-42WFPQ
Jones	J-2613SG
McDonald	08UQM
Mueller	H-15363

Angle Meter Ball Valve (FIP x Meter Swivel Nut)
3/4"

Ford	BA13-332W
Jones	J-1966W
McDonald	4604B
Mueller	B-24265

Meter Boxes & Covers

Size	Location	Box Number	Cover Number
1"	Traffic	Requires two (2) single boxes. Refer to Std. 863	
1"	Nontraffic *Probe	BES C24 Christy B24	BES C24E Christy B24E *Christy B24-61EP Quazite PG1819WAQ150

*Probe - 1 3/4" hole in meter box.

Standard 865 - 2" Water Service Lateral For 2" or 1 ½" Meter

2" Straight Ball Valve (FIP x Meter Flange)

Ford	BF13-777W
Jones	J-1912W
McDonald	6101MW
Mueller	B-24337

2" Angle Ball Valve (FIP x Meter Flange)

Ford	BFA13-777W
McDonald	4604B
Mueller	B-24286

2" Angle Ball Valve (Compression x Meter Flange)

Jones	J-1975WSG
McDonald	4602BQ
Mueller	B-24276

2" Coupling (MIP x Compression)

Ford	C84-77-Q
Jones	J-2605SG
McDonald	4753Q
Mueller	H-15428

2" 90□ Elbow (Compression x Compression)

Ford	L44-77-Q
Jones	J-2611SG
McDonald	4761Q
Mueller	H-15526

2" Straight Coupling (Compression x Compression)

Ford	C44-77-Q
Jones	J-2609SG
McDonald	4758Q
Mueller	H-15403

2" Resilient Seated Gate Valve

American Flow	502
AVK	Series 03-35
Clow	F-6103
Mueller	A-2360

Tapping Service Saddle
Refer to Approved List for Standard 863.

Meter Boxes & Covers

Size	Location	Box Number	Cover Number
2"	Traffic	BES C1730 w/ext Christy B1730 w/ext	BES C1730-GH Christy B1730-51G
2"	Nontraffic	BES C36 w/ext Christy B36 w/ext Quazite PG1730BA12	BES C36E Christy B36E Quazite PG1730WAP350
2"	Traffic * Probe	BES C1730 w/ext Christy B1730 w/ext	BES C1730 Christy B1730-51GP
2"	Nontraffic * Probe	BES C36 w/ext Christy B36 w/ext	BES C36 PEW Christy B36 PEW

*Probe - 1 3/4" hole in meter box

Standard 866 4" Water Service Lateral For 3" Meter
Standard 867 4" Water Service Lateral For 4" Meter

Tapping Sleeves
Refer to Approved List for Standard 878

Meter Boxes & Covers

Size	Location	Box Number	Cover Number
3" & 4"	Traffic	BES C52 w/extension Christy B52 w/extension	Cover supplied by Utilities Department. Coordinate installation with your inspector.
3" & 4"	Nontraffic	BES C52 w/extension Christy B52 w/extension	

Standard 868 - 6" Water Service Lateral For 6" Meter
Tapping Sleeves
Refer to Approved List for Standard 878.

Meter Boxes & Covers

Size	Location	Box Number	Cover Number
6"	Traffic	BES C52 w/extension Christy B52 w/extension	Cover supplied by Utilities Department. Coordinate installation with your inspector
6"	Nontraffic	BES C52 w/extension Christy B52 w/extension	

Standard 872 - Dirt Stop and Water Main Encasement
Casing Spacers
Calpico Inc. The Model M Series
Cascade Model CCS

Standard 875 - Below Ground Double-Check Valve Backflow Device

Boxes & Covers

Size	Location	Box Number	Cover Number
3/4" & 1"	As reqd.	Christy B30 Quazite PG1324BA12	Christy B30D Quazite PG1324WA50
2"	As reqd.	Christy B36	Christy B36D

Standard 877 - Gate Valve
Valve Box
Bes M2
Brooks 4TT

Christy	G4
D & L	M-9009
South Bay	B21

Gate Valves

Valves shall conform to the latest revision of AWWA Standard C-509 covering resilient seated gate valves. (For example: Clow, US Pipe, American Flow Control)

Standard 878 - Butterfly Valve & Tapping Valve

Tapping Sleeves (Stainless Steel)- 4" & larger

Size on size up to and including 8" on 8" (examples: 4" on 4", 6" on 6") and any combinations (examples: 4" on 8", 6" on 8") DIP, CIP, PVC, and Existing ACP:
(Sleeve must be compatible with pipe type).

Dresser	Style 630
Ford	FTSS
JMC	415
JCM	432
Mueller	H-304
Powerseal	3490
Romac	SST111
Smith-Blair	663
	664-665

For taps smaller than 4", See Appropriate Standard

Standard 879 - Single Check Detector in Vault

Detector Check Valve

Ames	1000 DCV
Hersey	EDC III
Hersey	EDC IV

Precast Vault

		Cover
Utility Vault Co.	44-SRW(4'x 4')	4848SRW
	555-SRW(5'x 5')	4848SRW

(Pedestrian Walkways must have Algrip surface)

Standard 880 - Double Check Detector Fire Line Backflow Assembly

Standard 881 - Pressure Reducing Valves

Pressure Reducing Valves

CLA-VAL	90-01
Singer	206-PRC
Watts	PV-10-01

Precast Vault and Cover

Refer to Approved List for Standard 879.

Standard 882 - Surge Anticipator Valve Or Pressure Relief Valve

Tapping Sleeves

Refer to Approved List for Standard 878.

Utility Box and Cover (Non-traffic Loading)

Boxes & Covers

Box Number	Cover Number
Christy B48	Christy B48M2
Quazite PG3048BA18	Quazite LG3048WAQ150

Standard 883 - Air & Vacuum / Air Release Valve

Tapping Service Saddle

Refer to Approved List for Standard 863.

1" Ball Valve Curb Stop (FIP x FIP)

Ford	B11-444W
Jones	J-1900W
McDonald	6101W
Mueller	B-20200

1" Corporation Stop (AWWA/CC Taper Thread Inlet x MIP or FIP)

Ford	FB 400-4
Ford	FB1600-4
Jones	J-45
	J-51
McDonald	3128B
	3148B
Mueller	B-20045
	B-2996

1" 90° elbow (MIP x Compression)

Ford	L84-44-Q
Jones	J-2619SG
McDonald	4779MQ
Mueller	H-15531

1" 90° Brass elbow (FIP x Compression)

Ford	L14-44-Q
Jones	J-2621SG
McDonald	4779Q
Mueller	H-15533

Combination Valves

APCO	143C
Crispin	UL10
Valmatic	VM-201C

Closure

Boxes & Covers

Location	Box Number	Cover Number
Traffic	Christy B36 Quazite PG1730BA12	Christy B36-61D Quazite PG1730HAR250
Nontraffic	Christy B36 Quazite PG1730BA12	Christy B36D Quazite PG1730WA50

Standard 884 - Water Meter For Private Non-residential Systems

5/8" Resetter
Ford VV32-12W

1" Resetter
Ford VV34-15W

Meter Boxes & Covers

Size	Location	Box Number	Cover Number
5/8" x 3/4"	Traffic	Christy B12	Brooks 37 Series Christy B12C
	Nontraffic	Christy B12	Brooks 37 Series Christy B12C
1"	Traffic	Christy B1324	Brooks 38 Series Christy B1324-61GH
	Nontraffic	Christy B30	Brooks 38 Series Christy B30E

Standard 885 - Water Meter for Private Process and Evaporative Water Lines

5/8" x 3/4" Resetter
Ford Resetter-52
McDonald 40-2
Mueller H-1412

1" Ford Resetter-52
McDonald 40-4
Mueller H-1412

Standard 886 - Water Sampling Station

3/8" Stainless Steel Ball Valve
"Truline Midget"

Aluminum Cast Cabinet
Kupferle Model 88 Ellipse

Standard 887 - 4" Ductile Iron Multi-Service Manifold

MIP x Compression Coupler 3/4", 1" and 2"
Ford C84-33-Q
C84-44-Q
C84-77-Q
Jones J-2605SG
McDonald 4753Q
Mueller H-15428

Tapping Service Saddles for Individual Services
Refer to Approved List for Appropriate Service Lateral Std.

Tapping Sleeves
Refer to Approved List for Standard 878.

Standard 888 - Above Ground Single Check Detector Assembly

Ames	1000DCV
Hersey	EDC III
Hersey	EDC IV

Standard 889 - Water Service Anode

Magnesium Anode
Calpico. Inc.

APPROVED:

MILES A. FERRIS
Director of Utilities/City Engineer

U\Eng\STANDARDS\EALWATER9-2002.wpd

RESOLUTION NO. 23258

RESOLUTION OF THE COUNCIL OF THE CITY OF SANTA ROSA ADOPTING PARK AND LANDSCAPE CONSTRUCTION STANDARDS

WHEREAS, revisions are periodically made to the Standard Plans and Construction Specifications for the City of Santa Rosa pursuant to Section 18-04.070 of the Santa Rosa City Code; and

WHEREAS, the proposed revisions were reviewed by the Construction Advisory Committee.

NOW, THEREFORE, BE IT RESOLVED that the Council of the City of Santa Rosa adopts the Park and Landscape Construction Standards, attached as Exhibit "A."

BE IT FURTHER RESOLVED that the Park and Landscape Construction Standards shall be effective for any City project for which improvement plans are submitted to the City for review and approval thirty days or more after the date of this resolution.

IN COUNCIL DULY PASSED this 26th day of August, 1997.

AYES: (6) Mayor Wright; Councilmembers Condron, Berto, Evans, Runyan, Wiggins

NOES: (0)

ABSTAIN: (0)

ABSENT: (1) Councilmember Martini

APPROVED: _____
Mayor

ATTEST: _____
Assistant City Clerk

APPROVED AS TO FORM

_____
City Attorney

8.97 Construction Standards.4

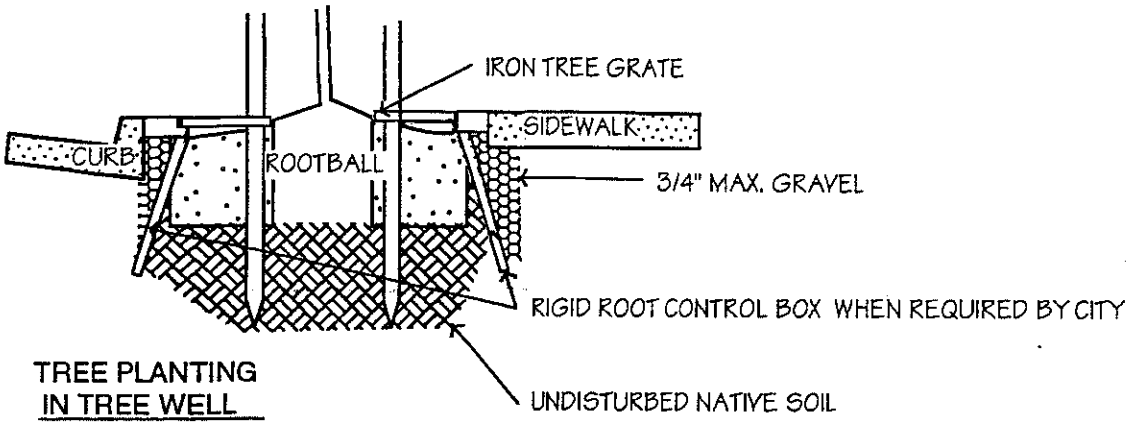

TREE PLANTING IN TREE WELL

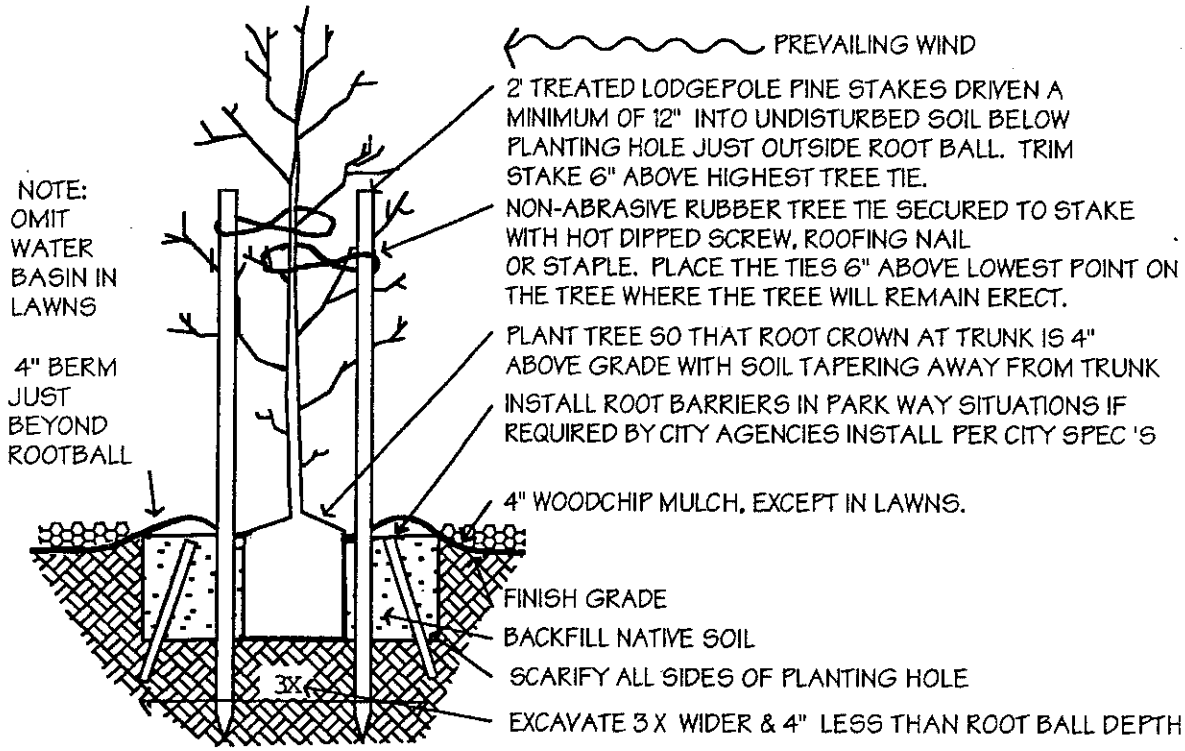

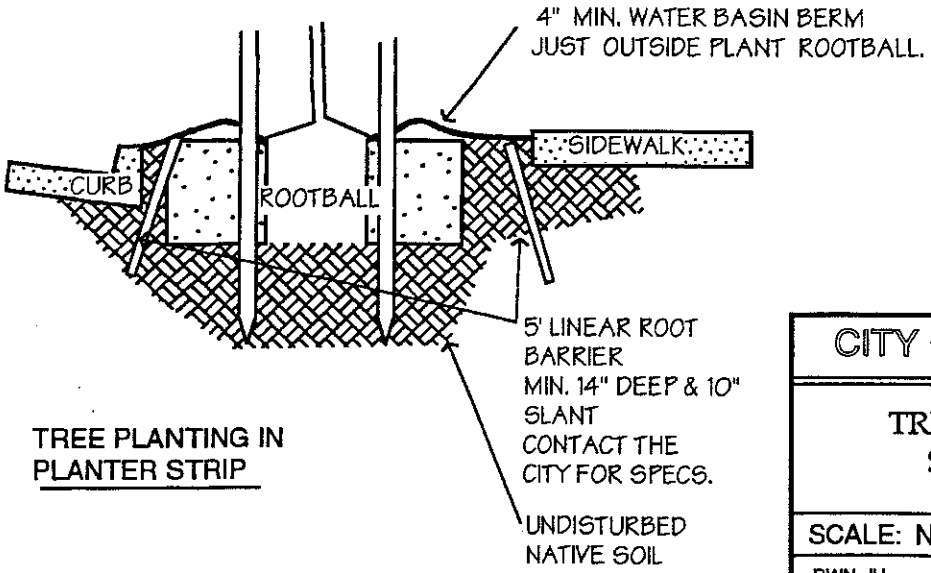

TREE PLANTING IN PLANTER STRIP

CITY OF SANTA ROSA		
TREE PLANTING AND STAKING DETAIL		
SCALE: None	DATE: August 1997	
DWN.JH CHK. DAK	APPROVED	FILE NO. STD.101-A

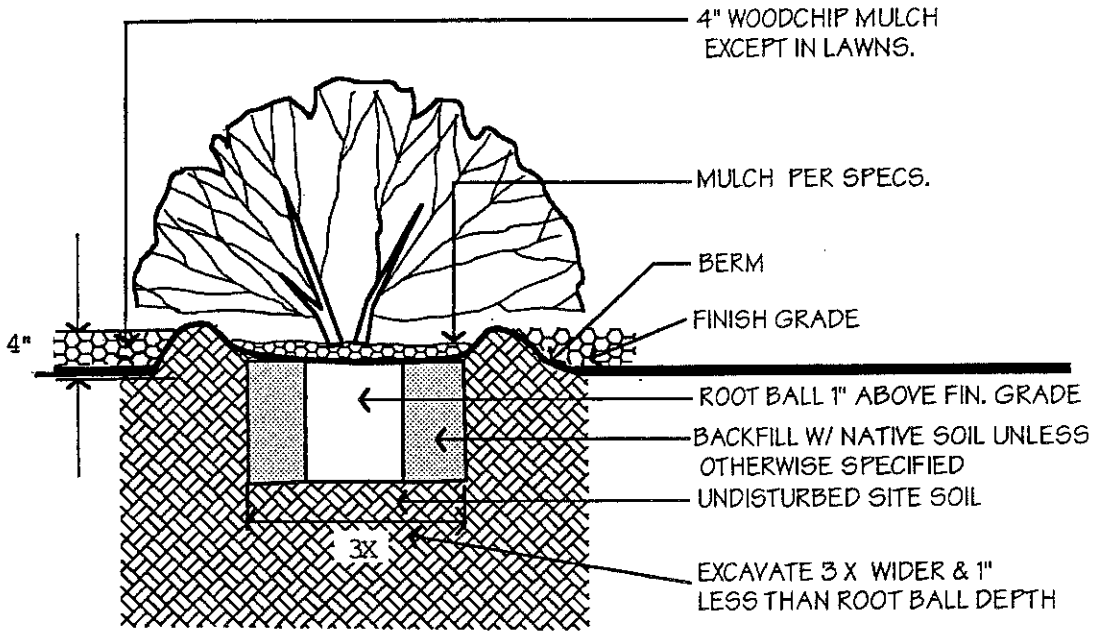

CITY OF SANTA ROSA		
SHRUB PLANTING DETAIL		
SCALE: None	DATE: August 1997	
DWN.JH CHK. DAK	APPROVED	FILE NO. STD.101-B

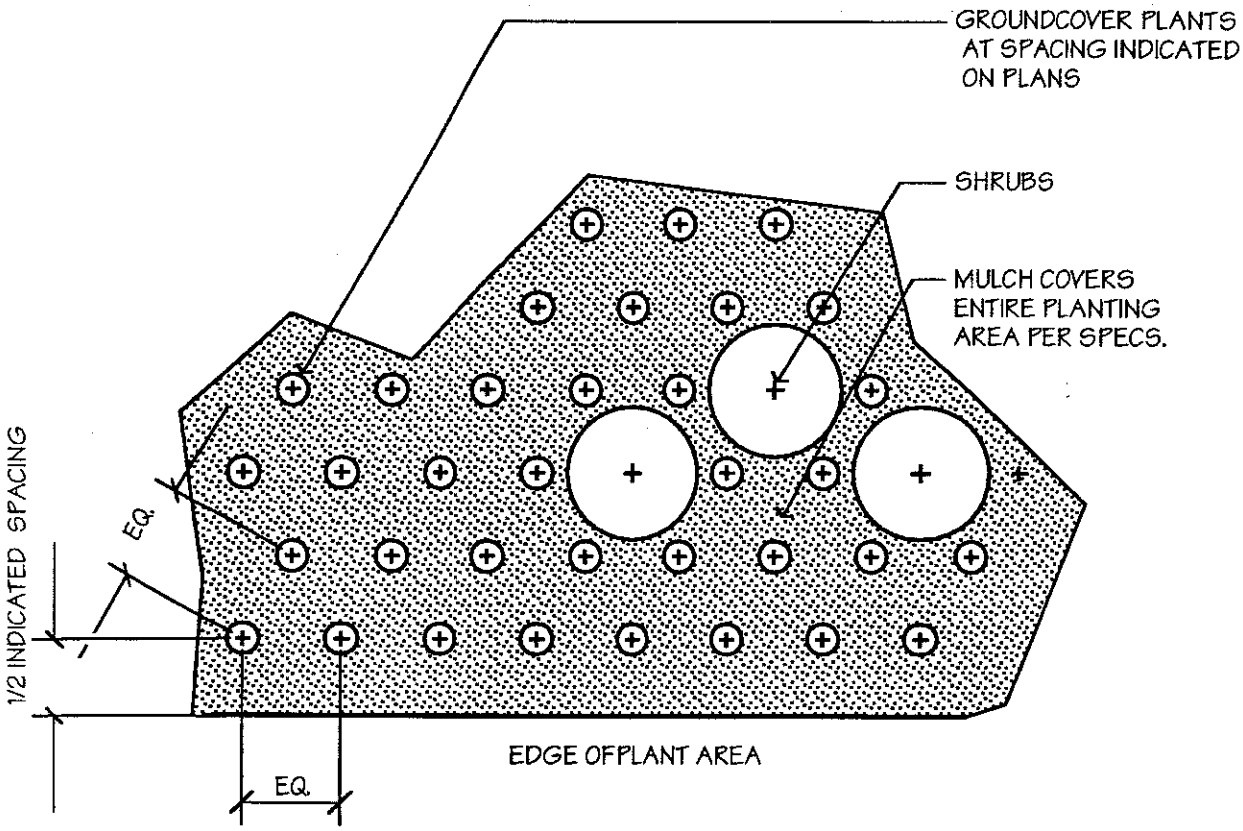

CITY OF SANTA ROSA		
GROUND COVER PLANTING DETAIL		
SCALE: None	DATE: August 1997	
DWN. JH CHK. DAK	APPROVED	FILE NO. STD.101-C

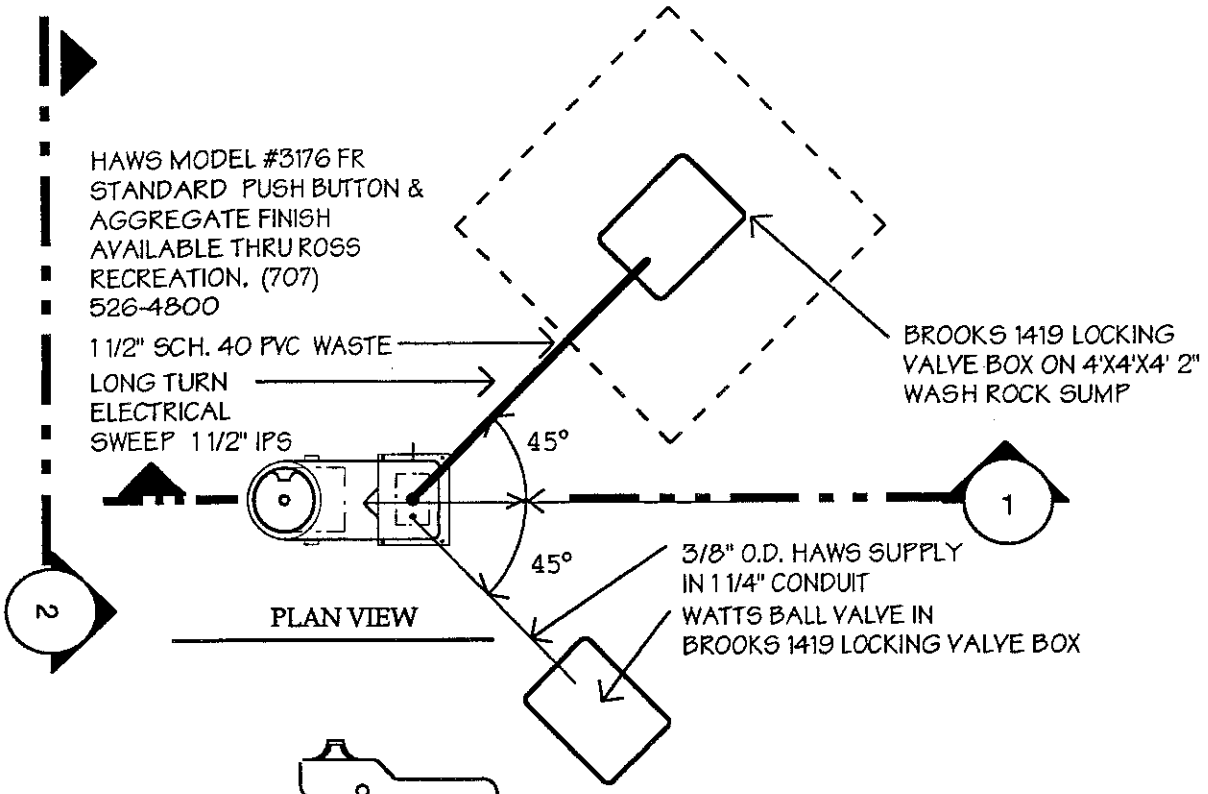

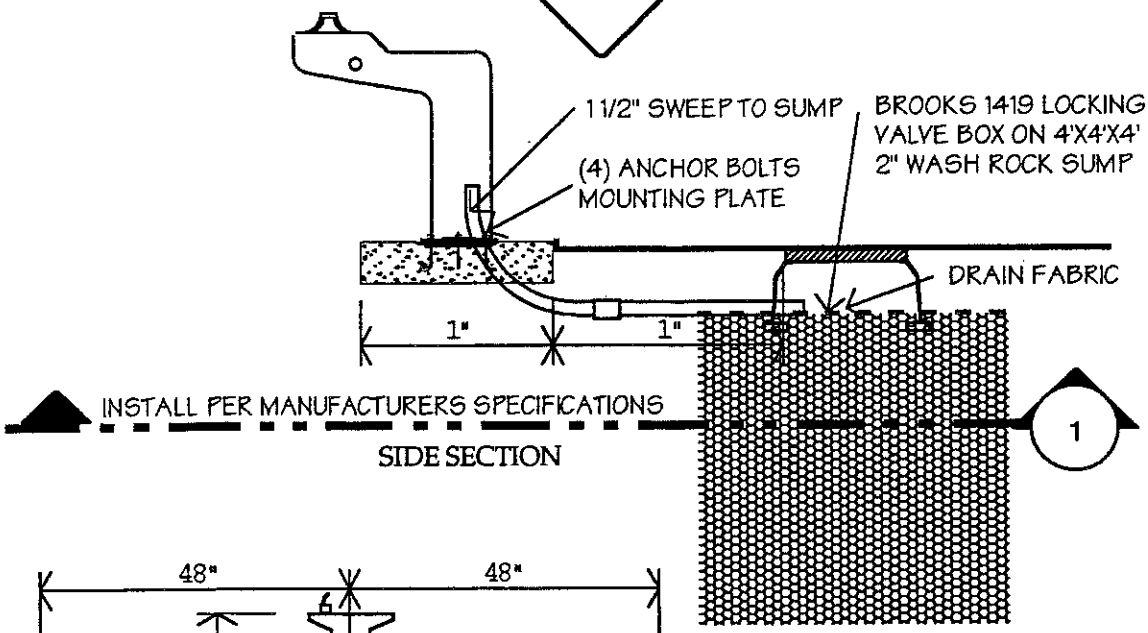

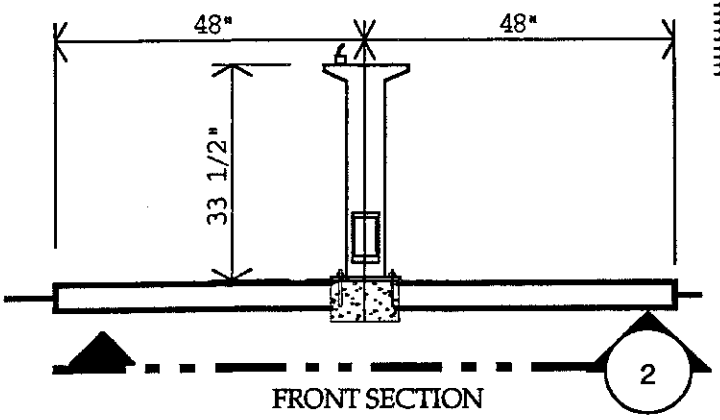

CITY OF SANTA ROSA		
DRINKING FOUNTAIN DETAIL		
SCALE: None	DATE: August 1997	
DWN. JH CHK. DAK	APPROVED	FILE NO. STD. 102

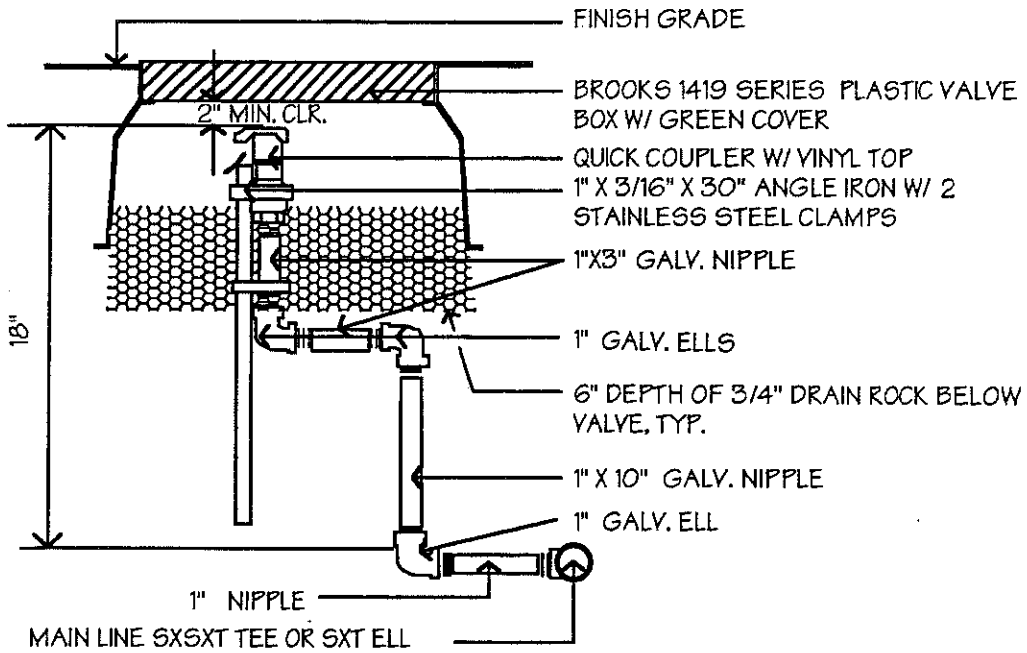

NOTE:

ALL FITTINGS TO MAIN LINE TO BE SCH. 40 GALV. TEFLON PASTE ON ALL THREADED PVC CONNECTIONS AND TEFLON PASTE FOR ALL GALV. THREADED FITTINGS.

CITY OF SANTA ROSA		
QUICK COUPLER VALVE DETAIL		
SCALE: None	DATE: August 1997	
DWN. JH CHK. DAK	APPROVED	FILE NO. STD. 103

NOTES:

1. UNLESS OTHERWISE NOTED, ALL FITTINGS ARE TO BE THE SAME IPT SIZE AS THE SPRINKLER IPT INLET THREAD SIZE.
2. SPRINKLER IS TO BE INSTALLED PERPENDICULAR TO EXISTING GRADE UNLESS FIELD CONDITIONS REQUIRE ADJUSTMENT.
3. SWING JOINT ASSEMBLY:
   A. O-RING JOINTS MUST BE FINGER TIGHTENED AND THEN BACKED OFF ONE FULL TURN TO ALLOW WING ACTION.
   B. CUT AND SOLVENT WELD SCHEDULE 40 PVC PIPE TO PROVIDE 10 INCHES BETWEEN CENTER LINES OF ELBOWS ON SWING ARM.
   C. FOLLOW APPROVED PROCEDURES FOR SOLVENT WELDING AS PER ASTM D2955-81.
4. CONTRACTOR MAY SUBMIT FOR APPROVAL EQUAL SUBSTITUTE EQUIPMENT FOR ALL SPECIFIED PROPRIETARY EQUIPMENT.
5. USE LASCO PVC SWING JOINT KIT OR EQUAL (MIPT INLET X FIPT OUTLET). LASCO PART NO.: (1/2") T524-100; (3/4") T724-100.
6. INSTALL TOP OF SPRINKLER FLUSH WITH FINISHED SOIL GRADE

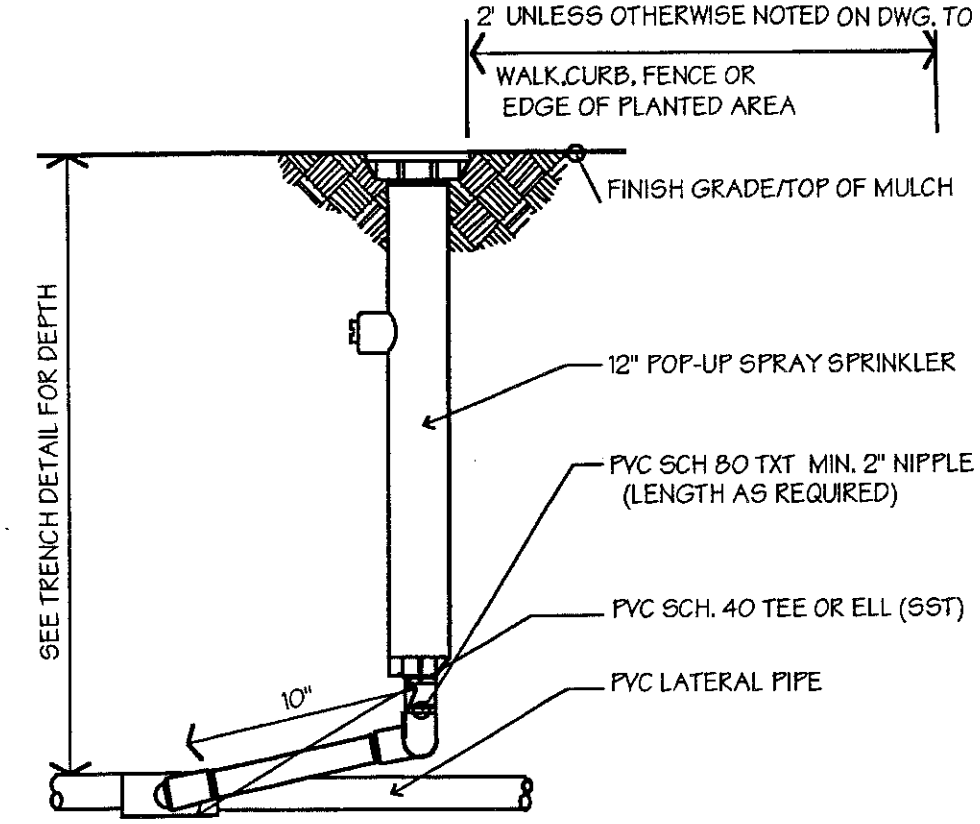

CITY OF SANTA ROSA		
HIGH POP-UP SPRAY SPRINKLER DETAIL		
SCALE: None	DATE: August 1997	
DWN.JH CHK. DAK	APPROVED	FILE NO. STD.104-A

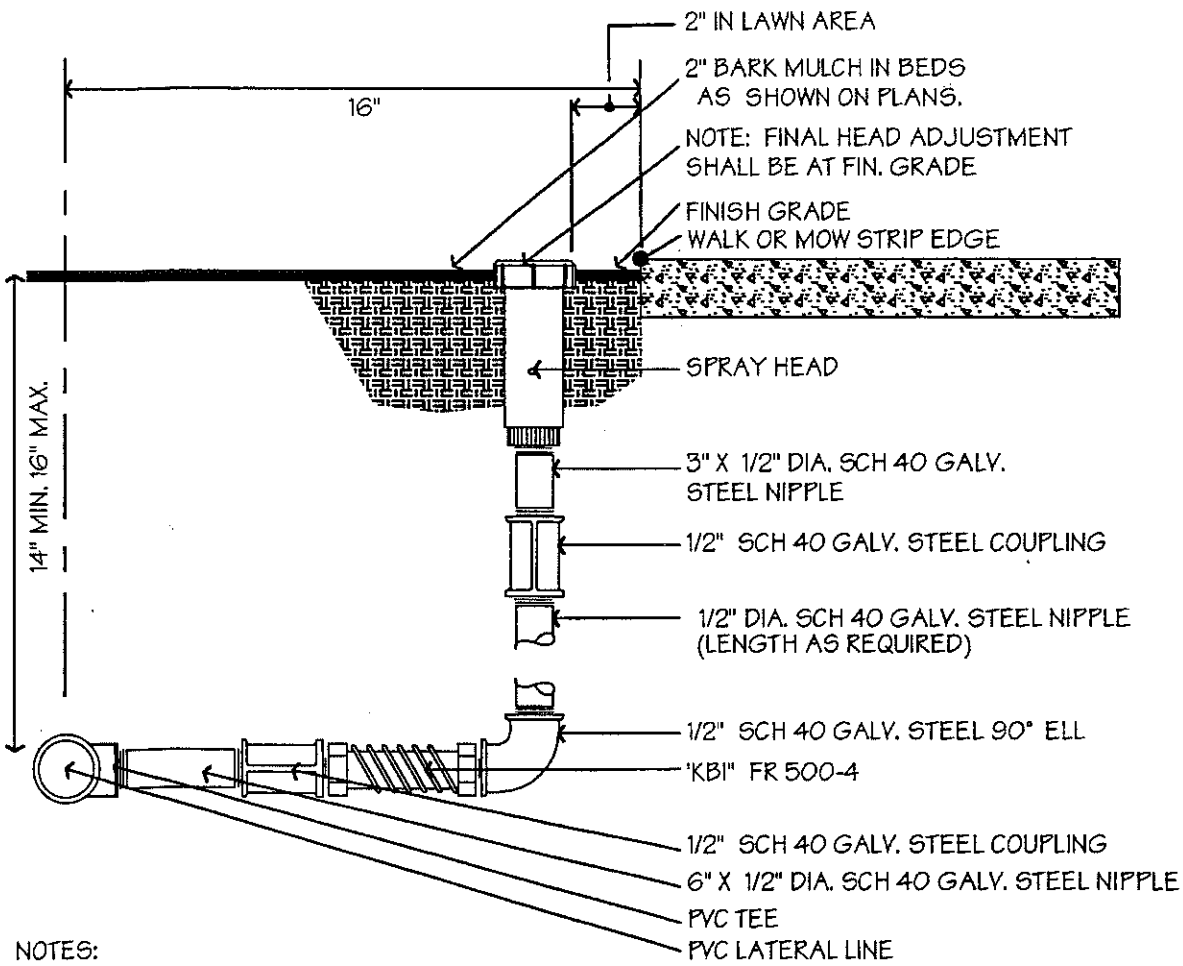

NOTES:

1. ALL GALVANIZED CONNECTIONS TO BE COATED W/ PIPE JOINT COMPOUND. "RECTORSEAL #100 NON-HARDENING TEFLON PASTE.
2. USE TEFLON PE AT BASE OF SPRINKLER ONLY.
3. FLEX NIPPLES TO BE 'KBI' 4" OR EQUAL.
4. TRENCH FOR LATERALS SHALL NOT EXCEED 16" FROM HEADER BOARD OR OTHER PATHWAY SURFACES.
5. PROTECT PATHWAY WITH PLYWOOD WHILE TRENCHING.
6. THE 6" GALV. NIPPLE AND GALV. COUPLING ARE TO BE USED ONLY IN CASES WHERE POP-UP IS INSTALLED ADJACENT TO PATHWAY SURFACES OR HEADER BOARDS. DELETE WHEN HEADS ARE TO BE INSTALLED MORE THAN 2" FROM PATHWAY OR FACE OF HEADERBOARDS.

CITY OF SANTA ROSA		
POP-UP SPRAY SPRINKLER DETAIL		
SCALE: None	DATE: August 1997	
DWN.JH CHK. DAK	APPROVED	FILE NO. STD.104-B

NOTES:

1. ALL GALVANIZED CONNECTIONS TO BE COATED W/ PIPE JOINT COMPOUND "RECTORSEAL #100 NON-HARDENING TEFLON PASTE.

2. USE TEFLON PE AT BASE OF SPRINKLER ONLY.

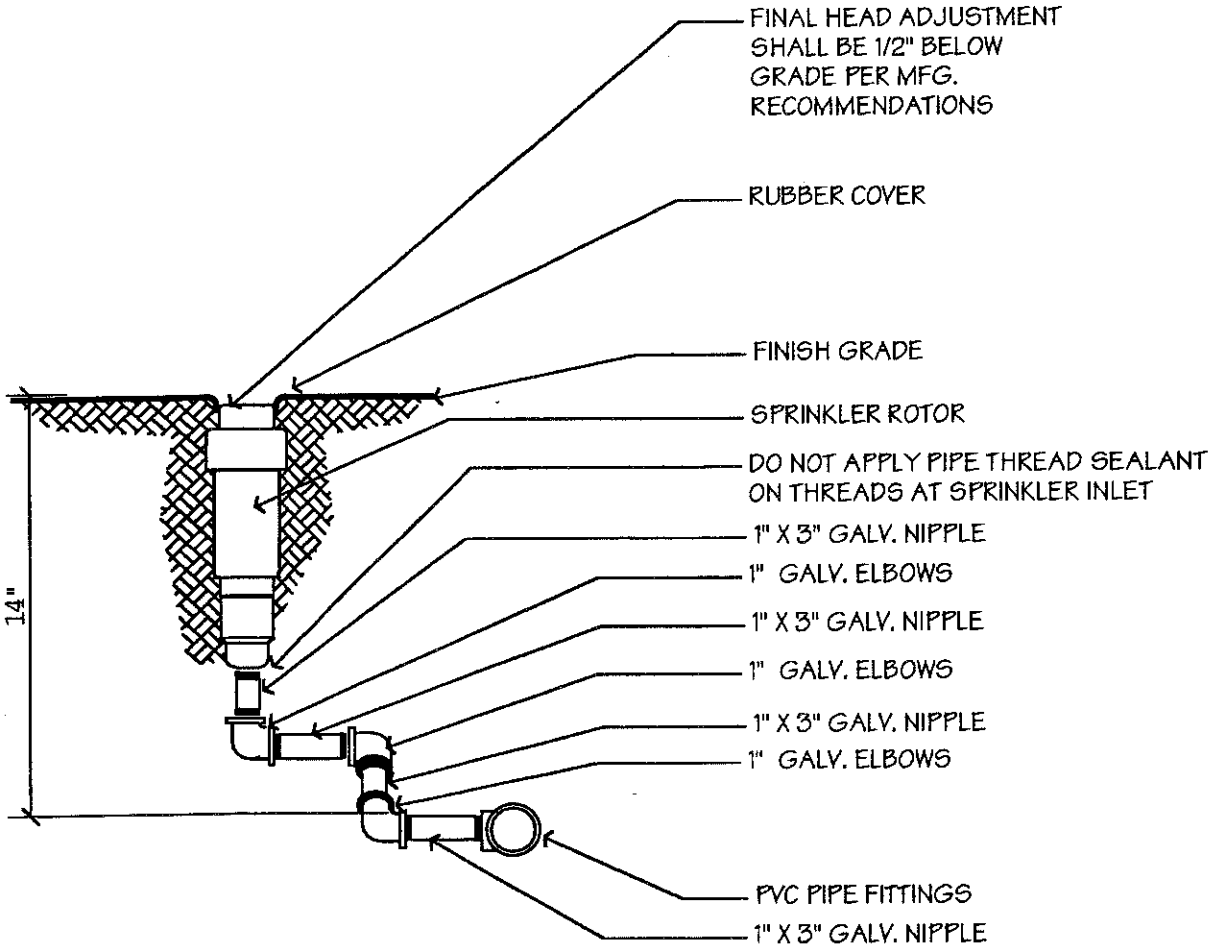

CITY OF SANTA ROSA		
LAWN ROTOR DETAIL		
SCALE: None	DATE: August 1997	
DWN. JH CHK. DAK	APPROVED	FILE NO. STD.104-C

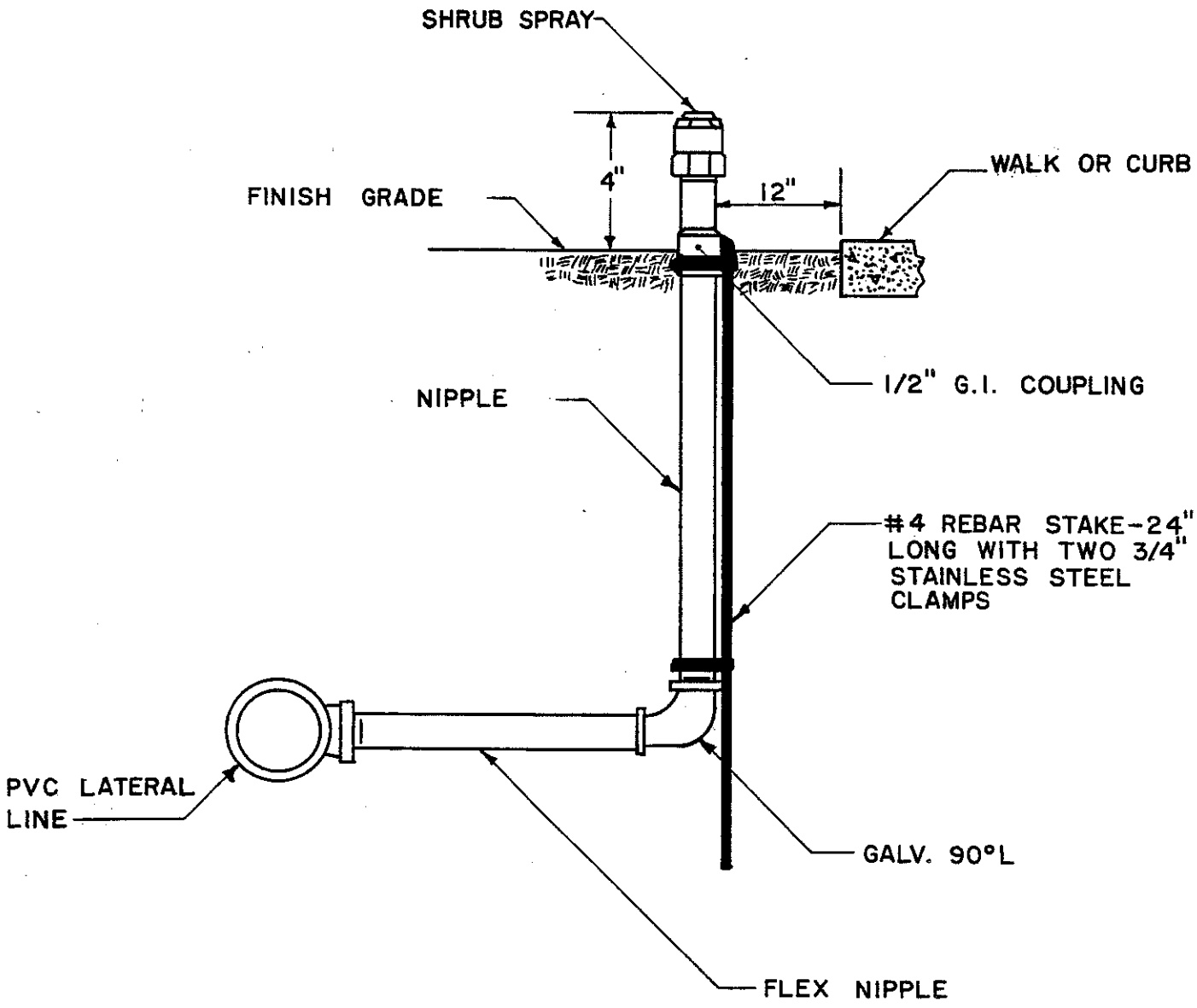

SHRUB RISER DETAIL

NOT TO SCALE

CITY OF SANTA ROSA		
SHRUB RISER DETAIL		
SCALE: NONE	DATE: JUNE 1986	
DWN CW CHK	APPROVED MES 6-18-86	FILE NO. STD.-105

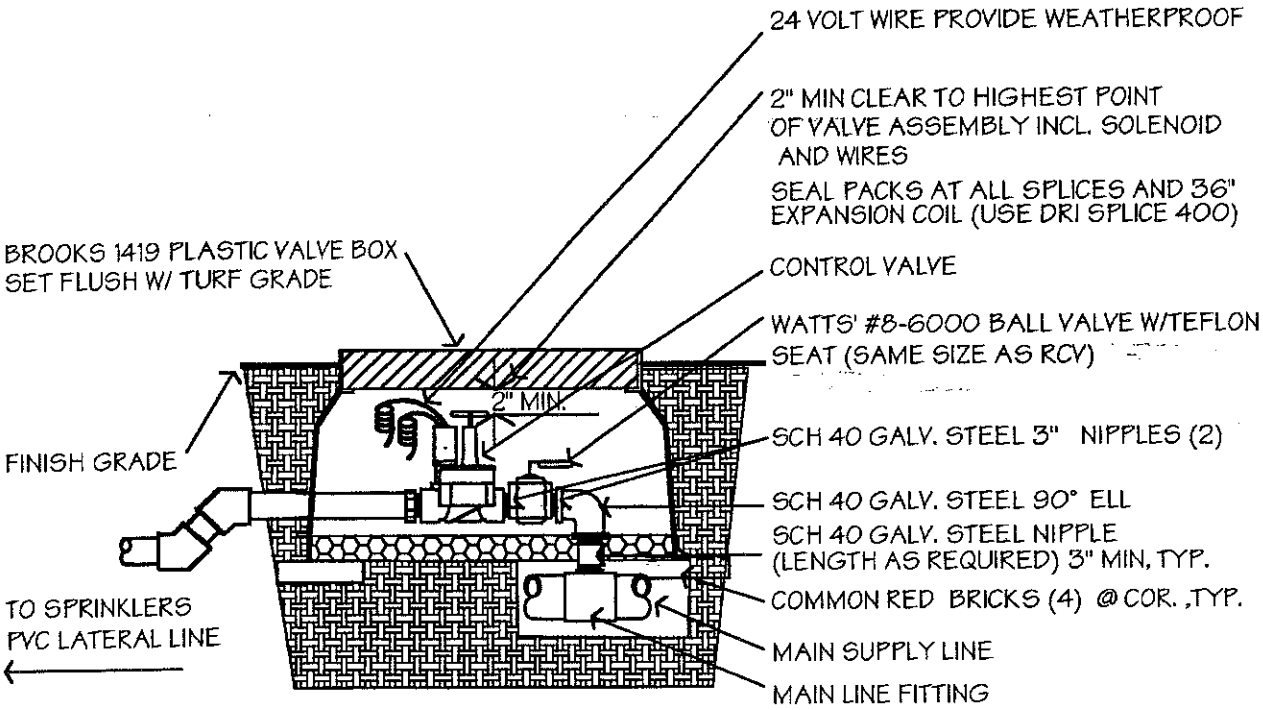

NOTES:
1. ALL THREADED GALVANIZED CONNECTIONS MADE UP WITH "RECTORSEAL" #100 NON-HARDENING TEFLON PASTE.
2. USE LASCO 905-305 PIPE THREAD SEALANT WHERE GALVANIZED THREADS FIT INTO PLASTIC.
3. ONE BALL VALVE PER VALVE OR VALVE MANIFOLD.
4. DO NOT ALLOW SOIL TO COME IN CONTACT WITH VALVE.

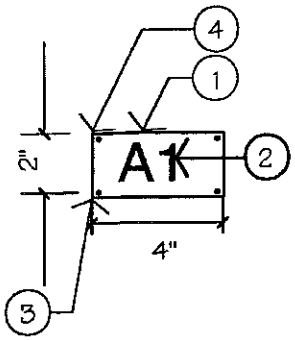

VALVE LABEL NOTES:

1. VALVE LABEL SHALL BE .08" THICK 2" X 4" ALUMINUM PLATE WITH STAMPED LETTERS AND NUMBERS TO CORRESPOND TO EACH IRRIGATION VALVE , QUICK COUPLER, ETC.
2. LETTERS SHALL BE 1 1/2" HIGH HELVETIC. ATTACH 3/16" POP RIVETS THRU LABEL & VALVE BOX AT EA. OF THE 4 CORNERS OF LABEL. ROUTED NUMBERS TO BE .040 DEEP PAINTED WITH GREEN ENAMEL
3. CORNERS TO HAVE 1/4" RADIUS AND ALL SIDES TO HAVE SMOOTH EDGES.
4. ALL BOXES SHALL BE LABELED INCLUDING QUICK COUPLERS AND BALL VALVES.

CITY OF SANTA ROSA		
REMOTE CONTROL VALVE DETAIL		
SCALE: None	DATE: August 1997	
DWN.JH CHK. DAK	APPROVED	FILE NO. STD.106

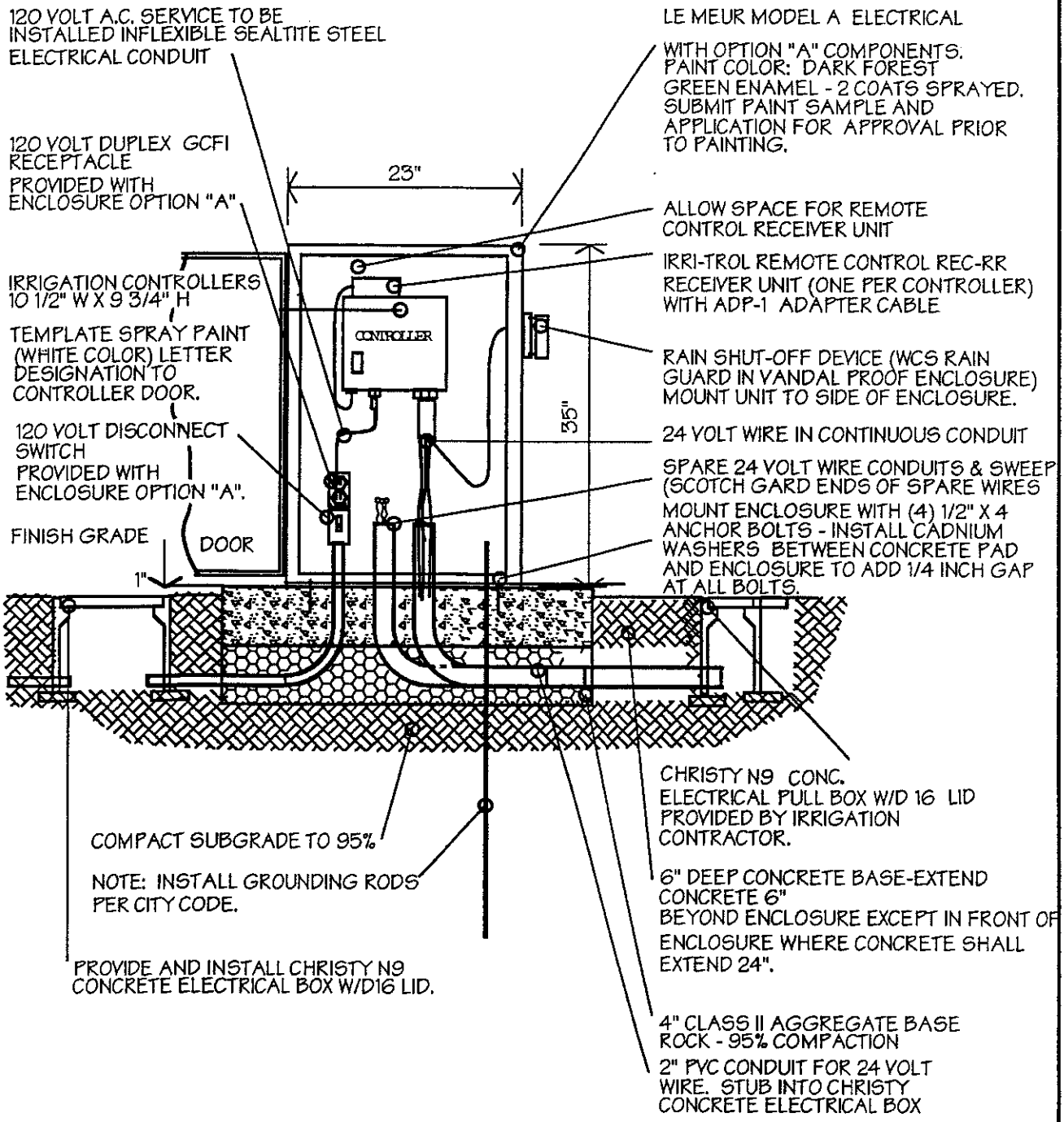

CITY OF SANTA ROSA		
SINGLE CONTROLLER AND ENCLOSURE DETAIL		
SCALE: None	DATE: August 1997	
DWN. JH CHK. DAK	APPROVED	FILE NO. STD.107-A

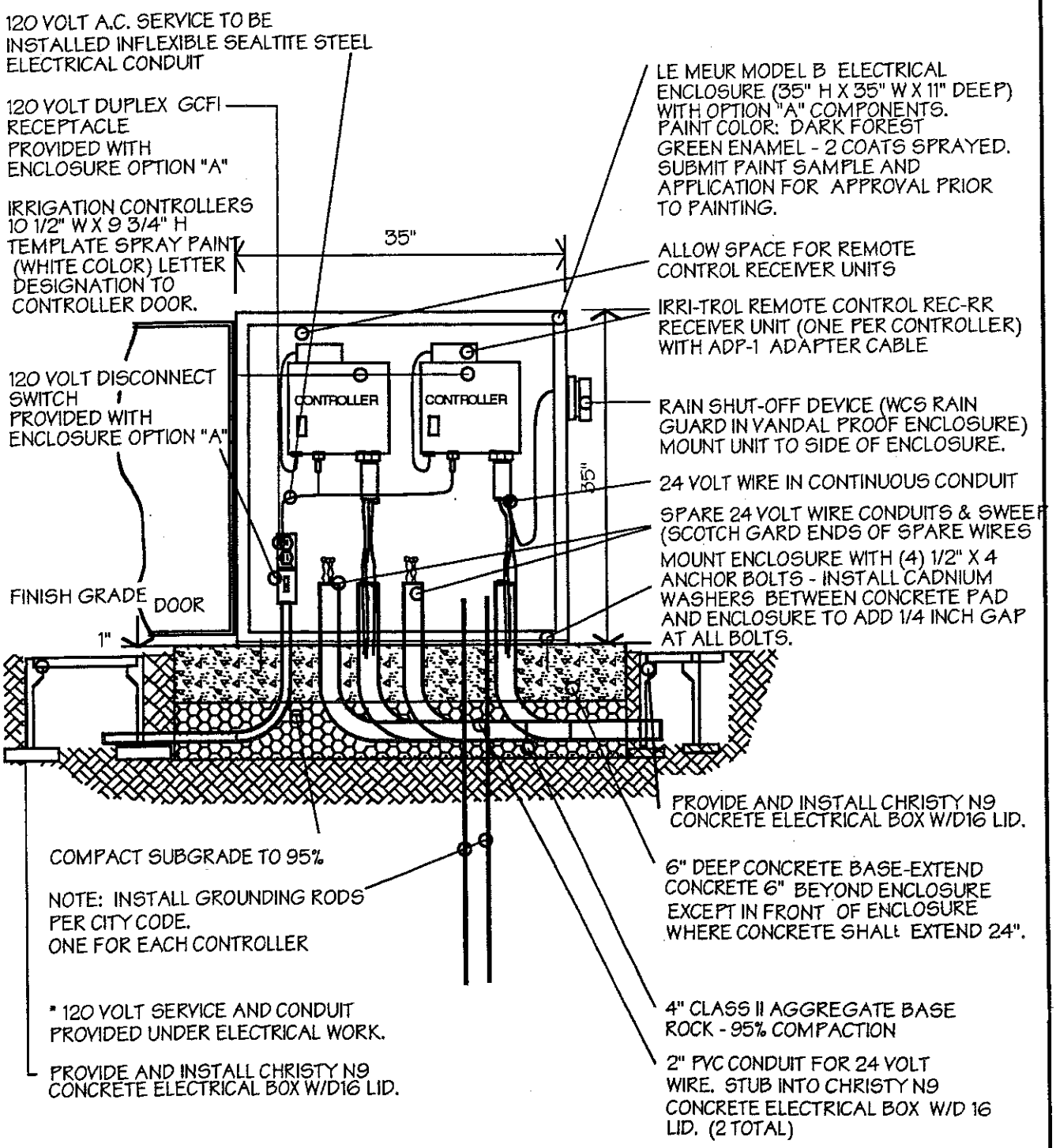

CITY OF SANTA ROSA		
MULTIPLE CONTROLLER AND ENCLOSURE DETAIL		
SCALE: None	DATE: August 1997	
DWN.JH CHK. DAK	APPROVED	FILE NO. STD.107-B

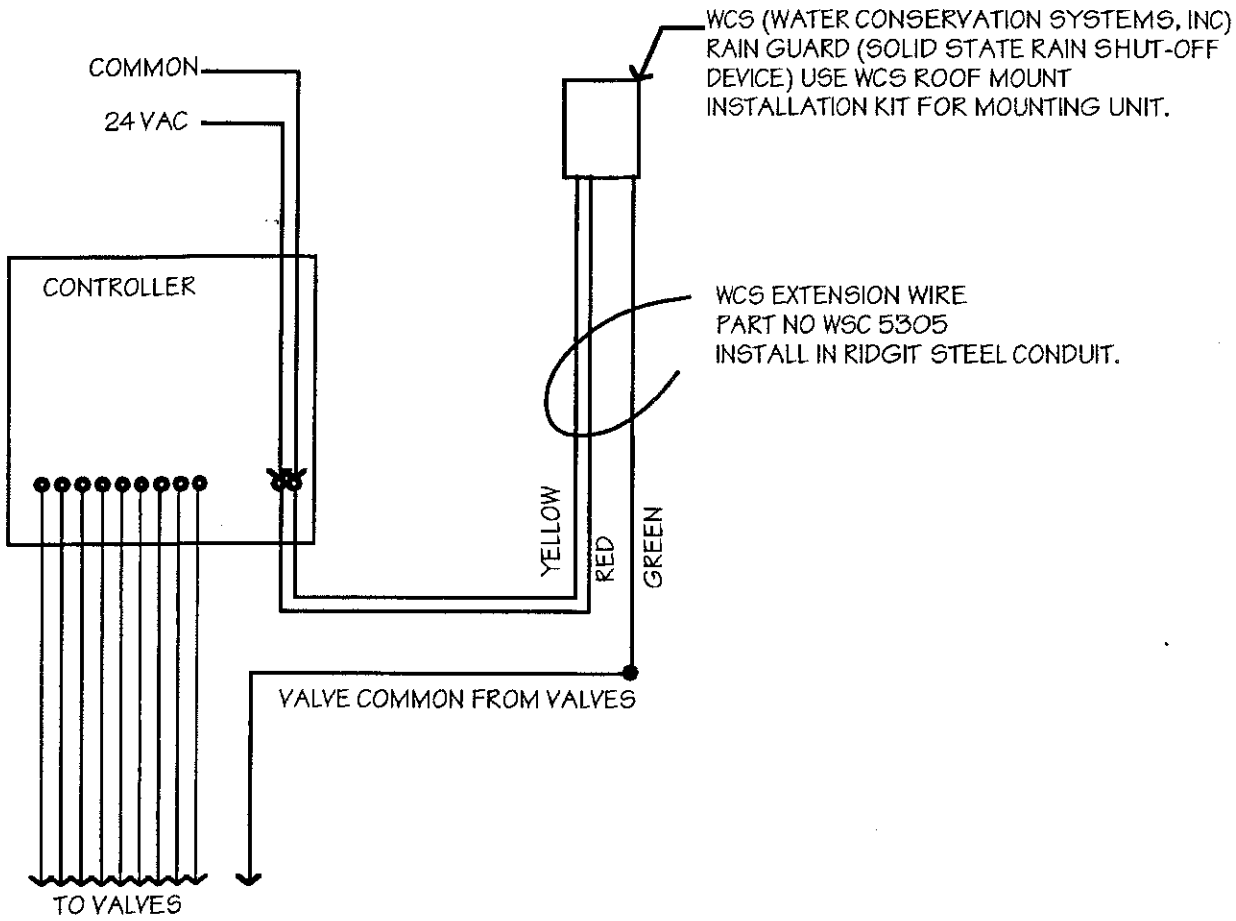

WIRING

1. DISCONNECT VALVE COMMON FROM CONTROLLER AND CONNECT TO GREEN WIRE ON RAIN GUARD.

2. CONNECT YELLOW WIRE ON RAIN GUARD TO THE VALVE COMMON POST ON CONTROLLER.

3. CONNECT RED WIRE FROM RAIN GUARD TO 24-30 VOLT A.C. POWER SOURCE POST ON CONTROLLER. THIS IS USUALLY LABELED "MASTER VALVE", "PUMP START" OR "24 V.A.C.".

LOCATION:

RAIN GUARD MUST BE INSTALLED IN CLEAR "SPACE" WHERE IT IS EXPOSED TO UNOBSTRUCTED RAINFALL AND IS CLEAR OF IRRIGATION SPRAY.

CITY OF SANTA ROSA		
RAIN SHUT-OFF DEVICE INSTALLATION		
SCALE: None	DATE: August 1997	
DWN. JH CHK. DAK	APPROVED	FILE NO. STD.108

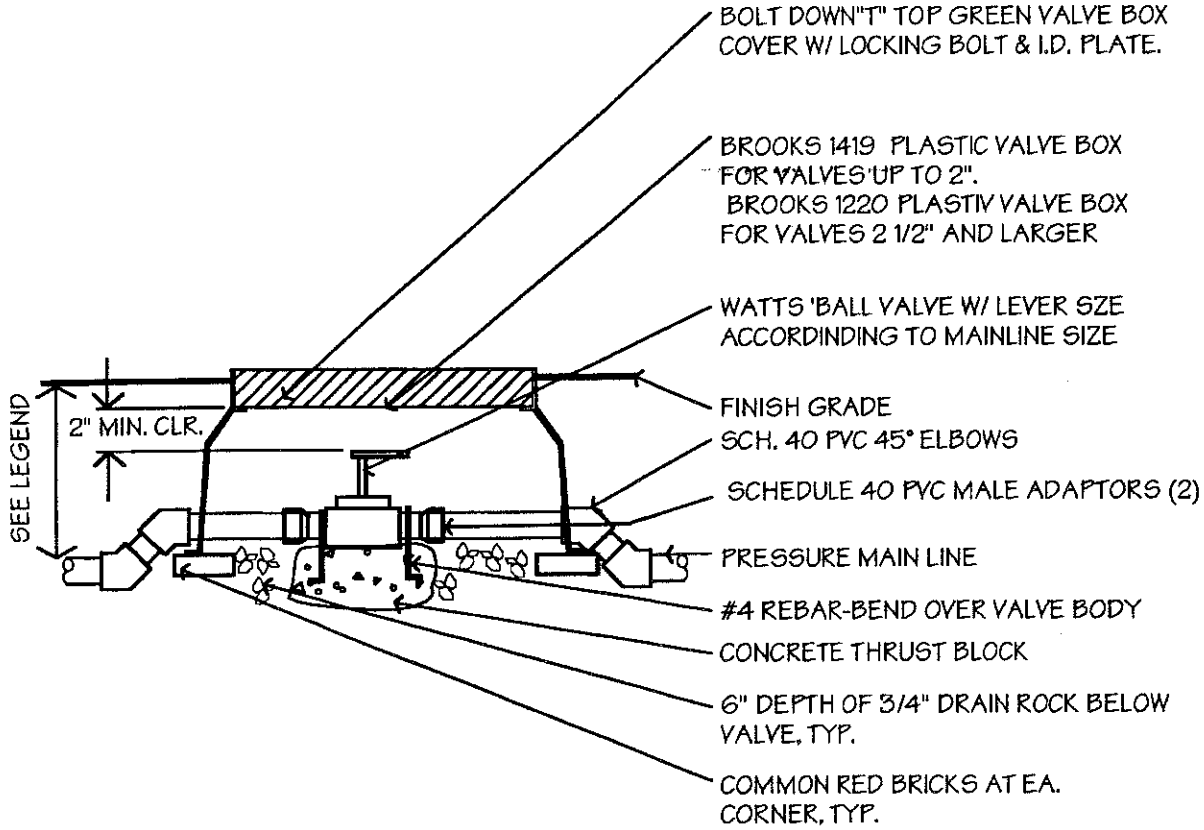

NOTES:

1. ALL THREADED GALVANIZED CONNECTIONS MADE UP WITH "RECTORSEAL" #100 NON-HARDENING TEFLON PASTE.
2. USE LASCO 905-305 PIPE THREAD SEALANT WHERE GALVANIZED THREADS FIT INTO PLASTIC.
3. ONE BALL VALVE PER VALVE OR VALVE MANIFOLD.
4. DO NOT ALLOW SOIL TO COME IN CONTACT WITH VALVE.
5. DO NOT ALLOW VALVE BOX TO REST ON PIPING.
6. SET BOX 2" ABOVE FINISH GRADE IN MULCH AREAS AND 1" ABOVE SOIL IN TURF AREAS.

CITY OF SANTA ROSA		
BALL VALVE DETAIL		
SCALE: None	DATE: August 1997	
DWN. JH CHK. DAK	APPROVED	FILE NO. STD.109

NOTES:

1. ALL THREADED GALVANIZED CONNECTIONS MADE UP WITH "RECTORSEAL" #100 NON-HARDENING TEFLON PASTE. NO TEFLON TAPE.
2. USE LASCO 905-305 PIPE THREAD SEALANT WHERE GALVANIZED THREADS FIT INTO PLASTIC.
3. ONE BALL VALVE PER VALVE OR VALVE MANIFOLD.
4. DO NOT ALLOW SOIL TO COME IN CONTACT WITH VALVE.
6. EACH VALVE SHALL BE LOCATED IN SEPARATE BOX..
7 THIS IS AN EXAMPLE OF THE LAYOUT OF THE MANIFOLD. EACH MANIFOLD REQUIRES A BALL VALVE AND A QUICK COUPLER VALVE. THE NUMBER OF REMOTE VALVES MAY VARY.
8. GALV. NIPPLES TO BE PRIMED AND WRAPPED WITH 10 MIL TAPE.

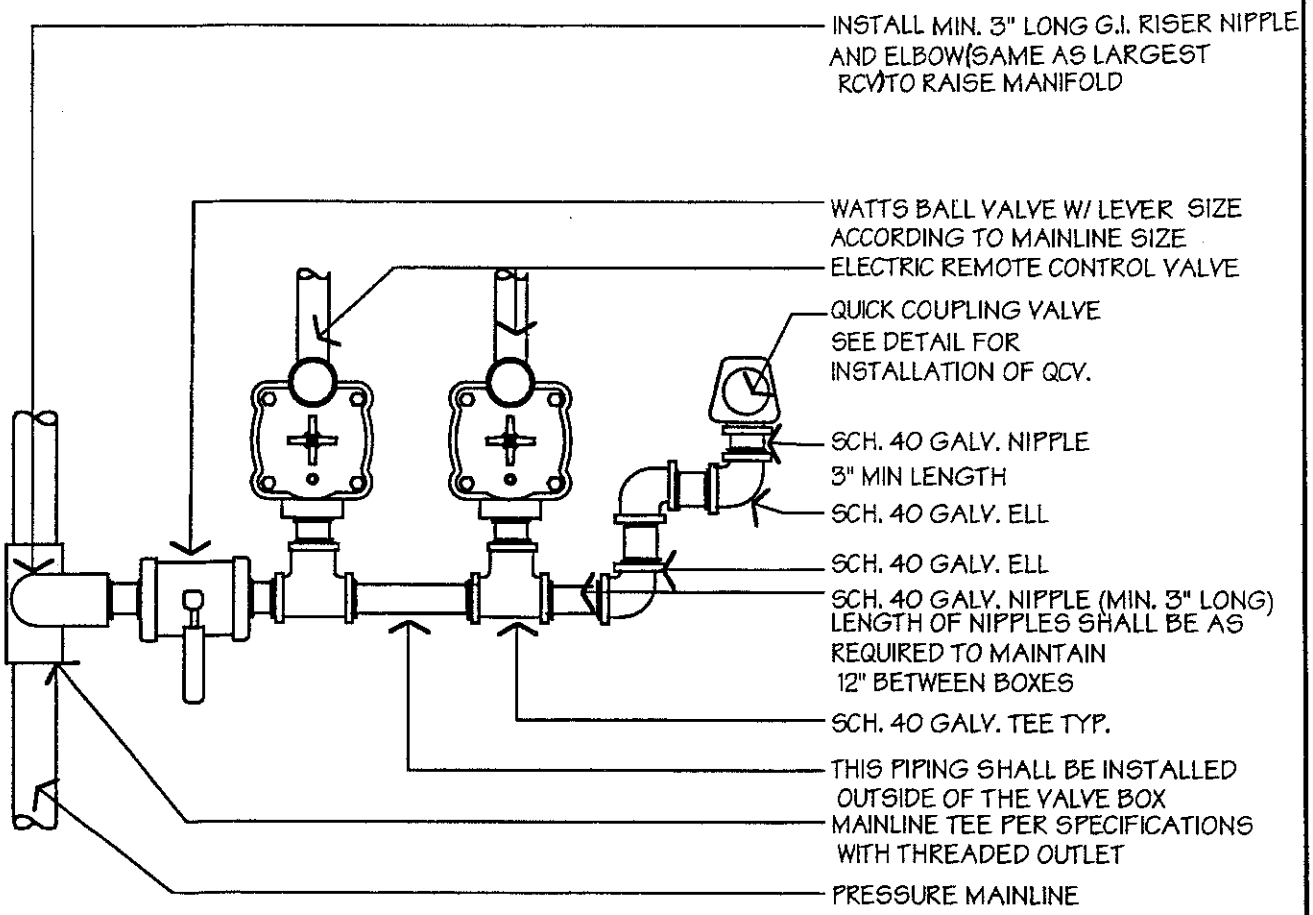

CITY OF SANTA ROSA		
VALVE MANIFOLD DETAIL		
SCALE: None	DATE: August 1997	
DWN. JH CHK. DAK	APPROVED	FILE NO. STD.110

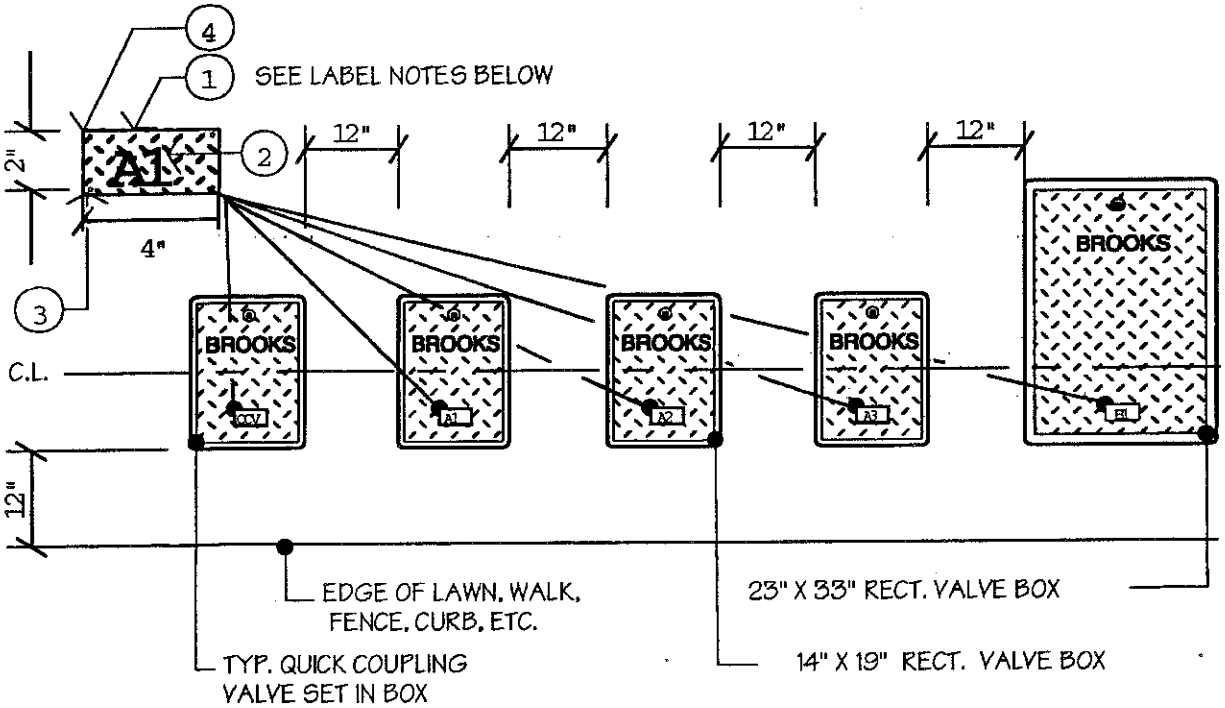

VALVE BOX NOTES:

1 .CENTER VALVE BOX OVER REMOTE CONTROL VALVE TO FACILITATE SERVICING VALVE.
2 .SET BOXES 1" ABOVE FINISH GRADE OR MULCH COVER IN GROUND COVER/SHRUB AREA AND FLUSH WITH FINISH GRADE IN TURF AREA.
3. SET RCV AND VALVE BOX ASSEMPLY IN GROUND COVER/SHRUB AREA WHERE POSSIBLE. INSTALL IN LAWN ONLY IF GROUND COVER DOES NOT EXIST ADJACENT TO LAWN.
4. SET BOXES PARALLEL TO EACH OTHER AND PERPENDICULAR TO EDGE.
5. AVOID HEAVILY COMPACTING SOIL AROUND VALVE BOXES TO PREVENT COLLAPSE AND DEFORMATION OF VALVE BOX SIDES.

VALVE LABEL NOTES:
1. VALVE LABEL SHALL BE .08" THICK ALUMINUM PLATE WITH STAMPED LETTERS AND NUMBERS TO CORRESPOND TO EACH IRRIGATION VALVE , QUICK COUPLER, ETC.
2. LETTERS SHALL BE 1 1/2" HIGH HELVETIC
2.ATTACH 3/16" POP RIVETS THRU LABEL & VALVE BOX AT EA. OF THE 4 CORNERS OF LABEL.
3. CORNERS TO HAVE 1/4" RADIUS AND ALL SIDES TO HAVE SMOOTH EDGES.
4. ALL BOXES SHALL BE LABELED INCLUDING QUICK COUPLERS AND BALL VALVES.

CITY OF SANTA ROSA		
VALVE BOX INSTALLATION		
SCALE: None	DATE: August 1997	
DWN.JH CHK. DAK	APPROVED	FILE NO. STD.111

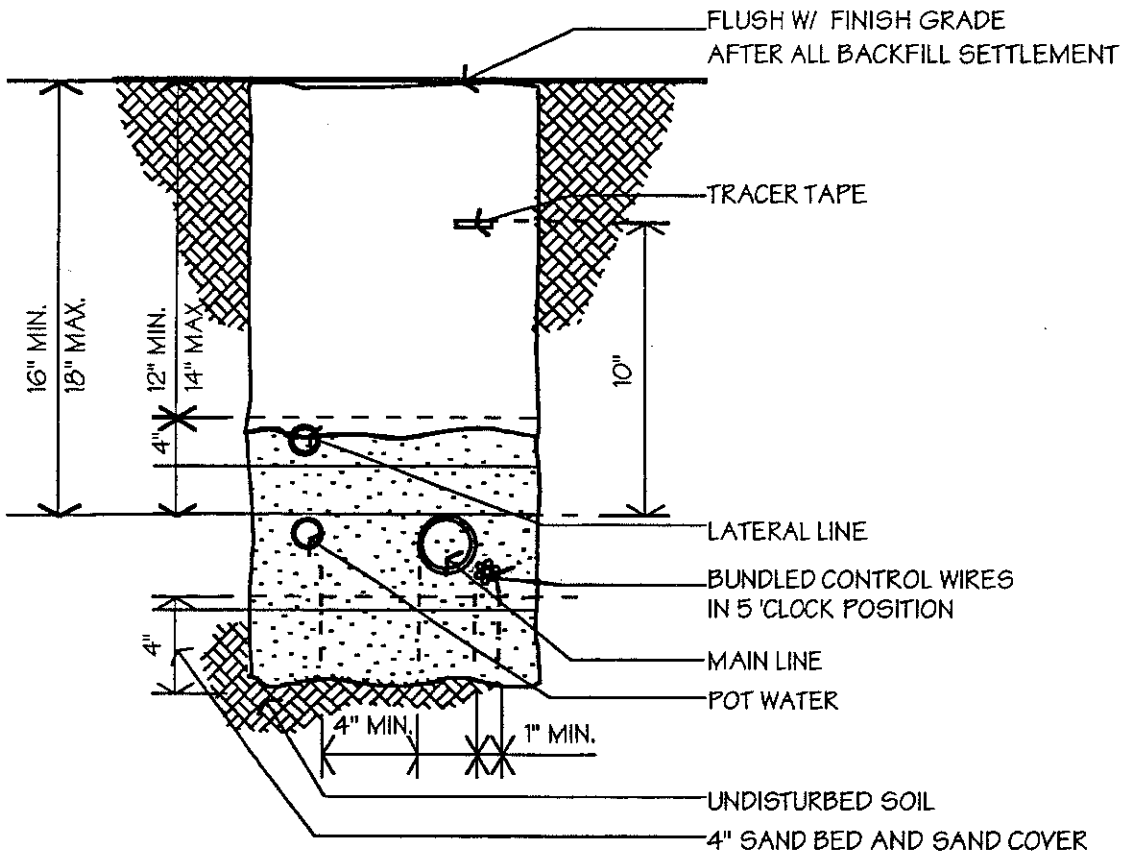

CITY OF SANTA ROSA		
TRENCH & PIPE DETAIL		
SCALE: None	DATE: August 1997	
DWN.JH CHK. DAK	APPROVED	FILE NO. STD.112

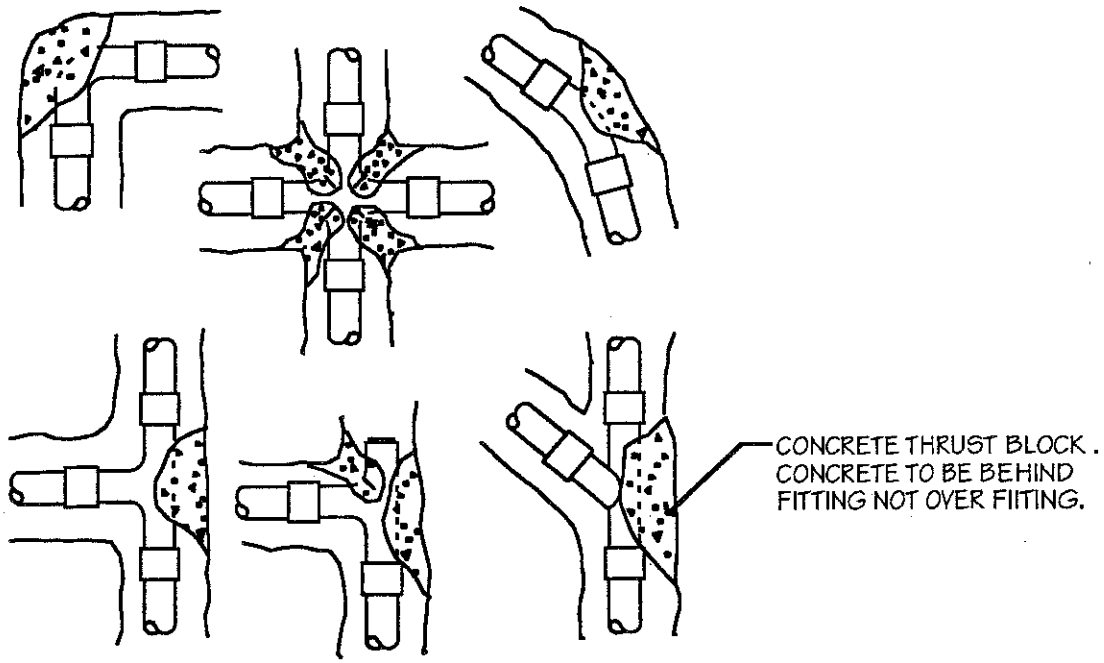

NOTES:

INSTALL MAIN LINE AS PER MANUFACTURER'S INSTALLATION GUIDE.SIZE OF CONCRETE THRUST BLOCKS SHALL BE PER PIPE MANUFACTURER'S INSTALLATION GUIDE AND IN ACCORDANCE WITH CITY STANDARD 854.

CITY OF SANTA ROSA		
IRRIGATION THRUST BLOCK DETAIL		
SCALE: None	DATE: August 1997	
DWN.JH CHK. DAK	APPROVED	FILE NO. STD.113

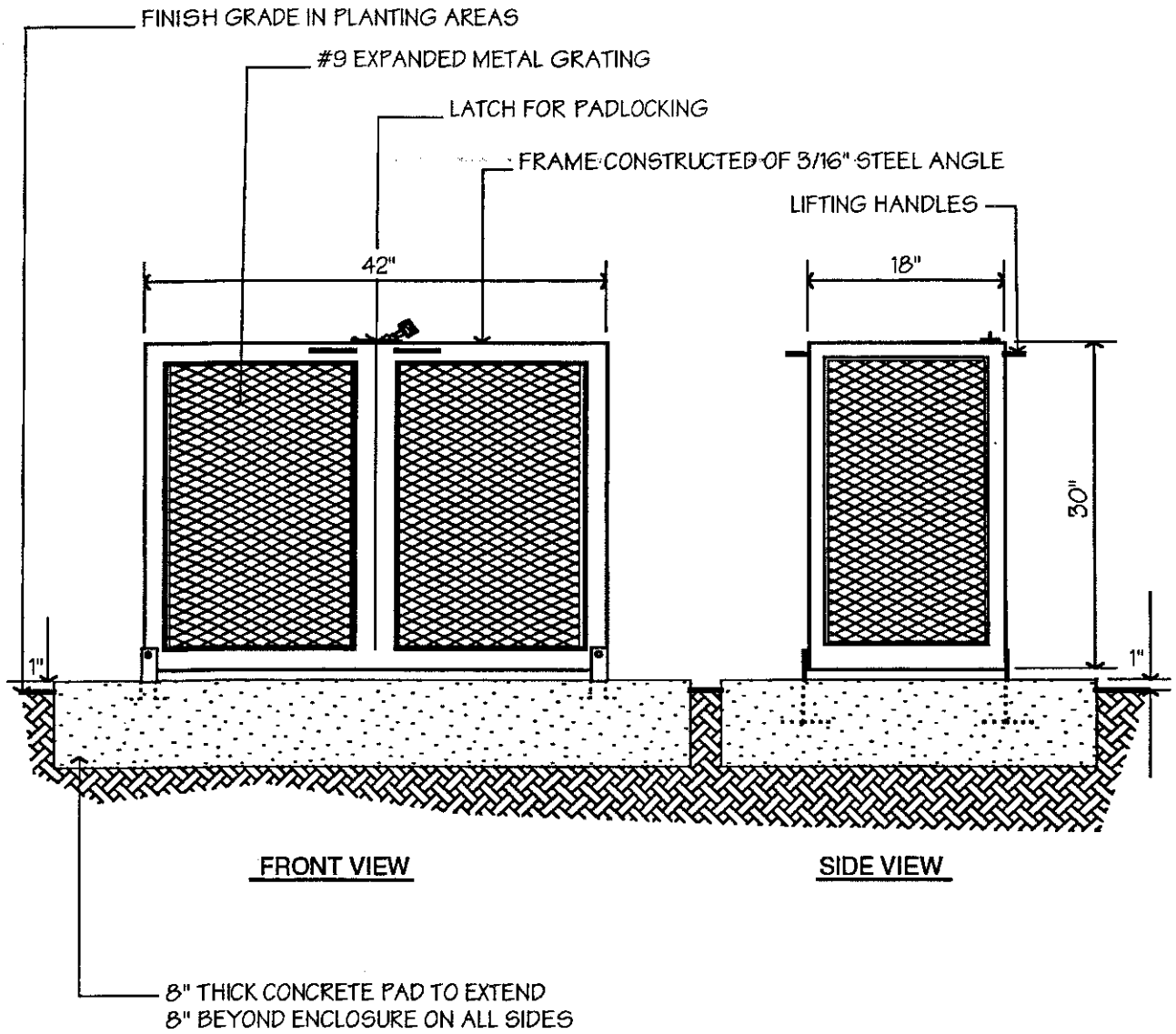

IRRIGATION CONTRACTOR TO PROVIDE ENCLOSURE FOR BACKFLOW ASSEMBLY. LEMEUR WELDING AND MFG. MOD. #BF 18" X 42" X 30" HIGH. CONTACT (714) 822-5100 FOR COORDINATION. PAINT COLORS: DARK FOREST GREEN ENAMEL, 2 COATS, SPRAYED. SUBMIT PAINT SAMPLE AND APPLICATION FOR APPROVAL PRIOR TO PAINTING.

CITY OF SANTA ROSA		
BACKFLOW PREVENTOR ENCLOSURE		
SCALE: None	DATE: August 1997	
DWN. JH CHK. DAK	APPROVED	FILE NO. STD.114

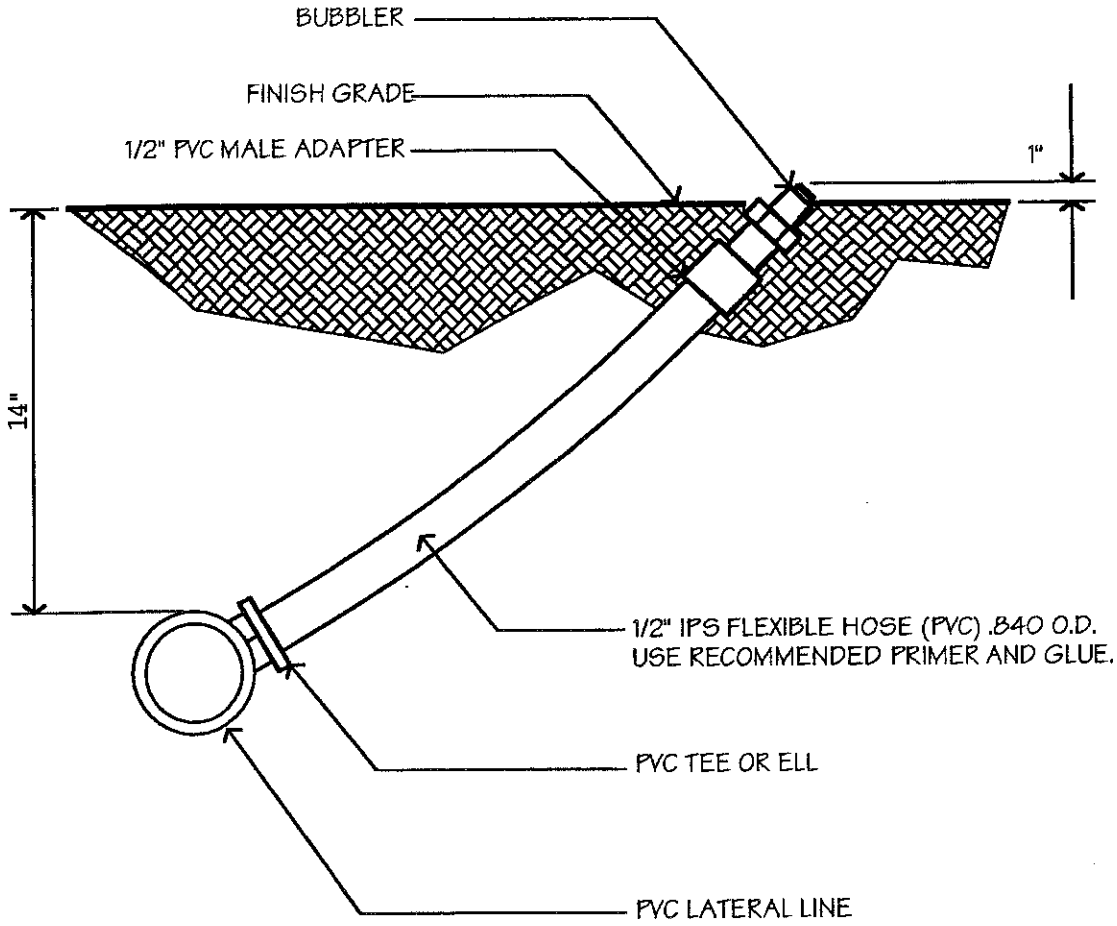

CITY OF SANTA ROSA		
BUBBLER DETAIL		
SCALE: None	DATE: August 1997	
DWN.JH CHK. DAK	APPROVED	FILE NO. STD.115

NOTES:

1. ALL FORMS SHALL BE APPROVED BY CITY INSPECTOR PRIOR TO POURING ANY CONCRETE.
2. INSTALL 1/4" EXP JOINTS AT 50' MAX. & 3/8" SCORE LINES AT 5' MAX..
   CONCRETE TO HAVE LIGHT BROOM FINISH.

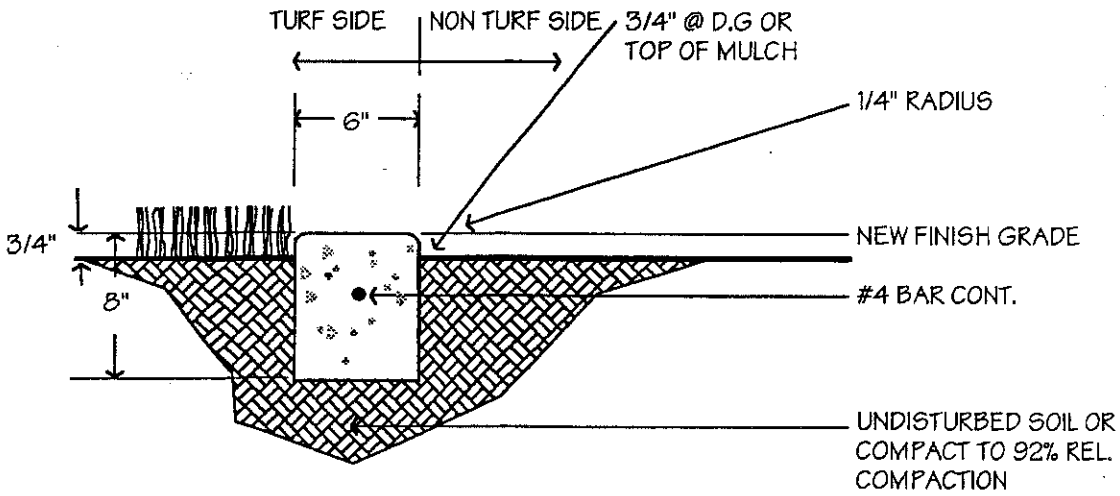

CITY OF SANTA ROSA		
CONCRETE MOW BAND		
SCALE: None	DATE: August 1997	
DWN. JH CHK. DAK	APPROVED	FILE NO. STD.120

1996
CITY OF SANTA ROSA
RECREATION AND PARKS DEPARTMENT

STANDARDS AND SPECIFICATIONS FOR PLANTING PARKWAY TREES

GENERAL REQUIREMENTS

A. The developer shall be required to provide and plant street trees per the following standards and specifications and in accordance with all City tree ordinances.

B. Approval of tree species is by the Recreation and Parks Department and must be in conformance with the master street tree list approved by the City Council.

C. A 48-hour notification shall be given to the Parks Division of the Recreation and Parks Department prior to installation of parkway trees. Parks Division will approve the genus, species, material quality, planting location and method of planting trees. Forty-eight hour notice is required for City crews to schedule and mark tree locations. (Call 543-3770)

D. To avoid conflicts with public utilities, lines of sight and streetscape features, trees shall be located as follows:

1. 30' in back from beginning of curb returns at intersections (visual triangle).

2. 10 - 15' from lamp standards, depending on species size.

3. 4' minimum from driveways, 6' normally.

4. 6' from all utilities, sewer, water, cable, gas lines and fire hydrants.

5. Each residential lot shall have at least one (1) tree, corner lots two (2) trees, except where not possible. Normally there will be a tree every 30' as feasible. In small lot subdivisions the intent is that reasonable concessions should be made regarding these standards to maximize the number of street trees planted.

6. 20' minimum spacing in commercial zones.

7. Where there are power or service lines above planter areas, tree selection must be appropriate for the limited overhead space restrictions. No single leader trees will be accepted except for very high wires (exceeding 30').

E. Trees have a minimum size of 7', including root ball, a good height to trunk caliper ration, with a minimum caliper of 1" at 12" above the top of the root ball, and a minimum

container size of fifteen (15) gallons.

1. Condition of the plants shall be symmetrical with well distributed branches, typical for variety and species; structurally sound; healthy; vigorous; free from plant disease, insect pests or their eggs; and shall have a healthy, normal root system, with no girdling or circling roots, well filling their containers but not to the point of being root bound. Trees shall not have leaders cut or be topped prior to delivery. Trees shall not have leaders cut or be topped prior to delivery. Trees must be able to stand upright when nursery stake is removed.

2. *Inspection:* All plant material shall be subject to the inspection and approval of the City. The City has the right to reject any item offered.

   a. A forty eight (48) hour notification shall be given prior to **any** inspection.

   b. Upon initial notification, the contractor shall indicate the number and sequences of planting phases necessary to complete the entire project.

   c. A twenty four (24) hour notice shall be given the City prior to starting any additional phase. Instructions regarding the proper method of staking and tying shall be given upon initial notification of planting.

   d. At the time of final inspection, the City may select at random one (1) tree from each planting phase to be removed and inspected for compliance to planting specifications.

PARKWAY TREE PLANTING OPERATIONS

A. All holes shall be dug with bottoms level, the width equal to 2 ½ times the diameter of the root ball, but no deeper than height of root ball. The City, upon notification, shall inspect holes **prior to planting** of trees.

B. Holes shall be backfilled with 100% native soil.

C. Removal of all nursery training stakes is required at the time of planting. Any tree which cannot stand upright without its nursery stakes will be rejected.

D. Turf shall be at least 18" away from the trunk of trees in all directions.

E. Set trees in center of hole in vertical position, with the root ball crown at least 1' to 1 ½' higher than the final grade. Tamp soil or add water halfway through the backfill process to eliminate air pockets and insure good soil contact with the root ball.

F. Construct a 4' high earth water basin capable of holding ten (10) gallons of water just outside the root ball. Water sufficient to fill the basin shall be applied immediately after planting.

G. If houses and/or other building are not occupied, trees shall be watered by the developer at least twice a week except during rainy season.

H. Root barriers are required in cutouts of 4' or smaller; root barrier strips will be used in parkway plantings in new subdivisions.

I. Each tree must be properly supported by two (2) Lodgepole Pine stakes. Stakes shall be a minimum of 2" x 2" and not less that 8' in length. Stake all trees at time of planting by placing stake in prepared hole just outside the root ball and driving stake a minimum of 12"' into soil. (See detail for final height of stake and vertical location of tree tie.

J. All trees shall be secured to stakes as detailed (or approved equal).

1. Chain lock plastic or rubber ties screwed or nailed into the stakes.

GUARANTEES

A. A fifteen (15) gallon tree shall be guaranteed as to growth and health for a period of ninety (90) days after final acceptance by the City.

B. Trees that fail to grow or are injured or damaged during planting operations shall be replaced within fifteen (15) days after notification. Replacement material shall be guaranteed as specified as original material.

TREES NOT INSTALLED ACCORDING TO CITY REQUIREMENTS WILL BE REJECTED BY THE CITY.

RECREATION AND PARKS DEPARTMENT
PARKS DIVISION
(707) 543-3770

Revised June 1996

6.96/wm2/lr/trees/stdspecs

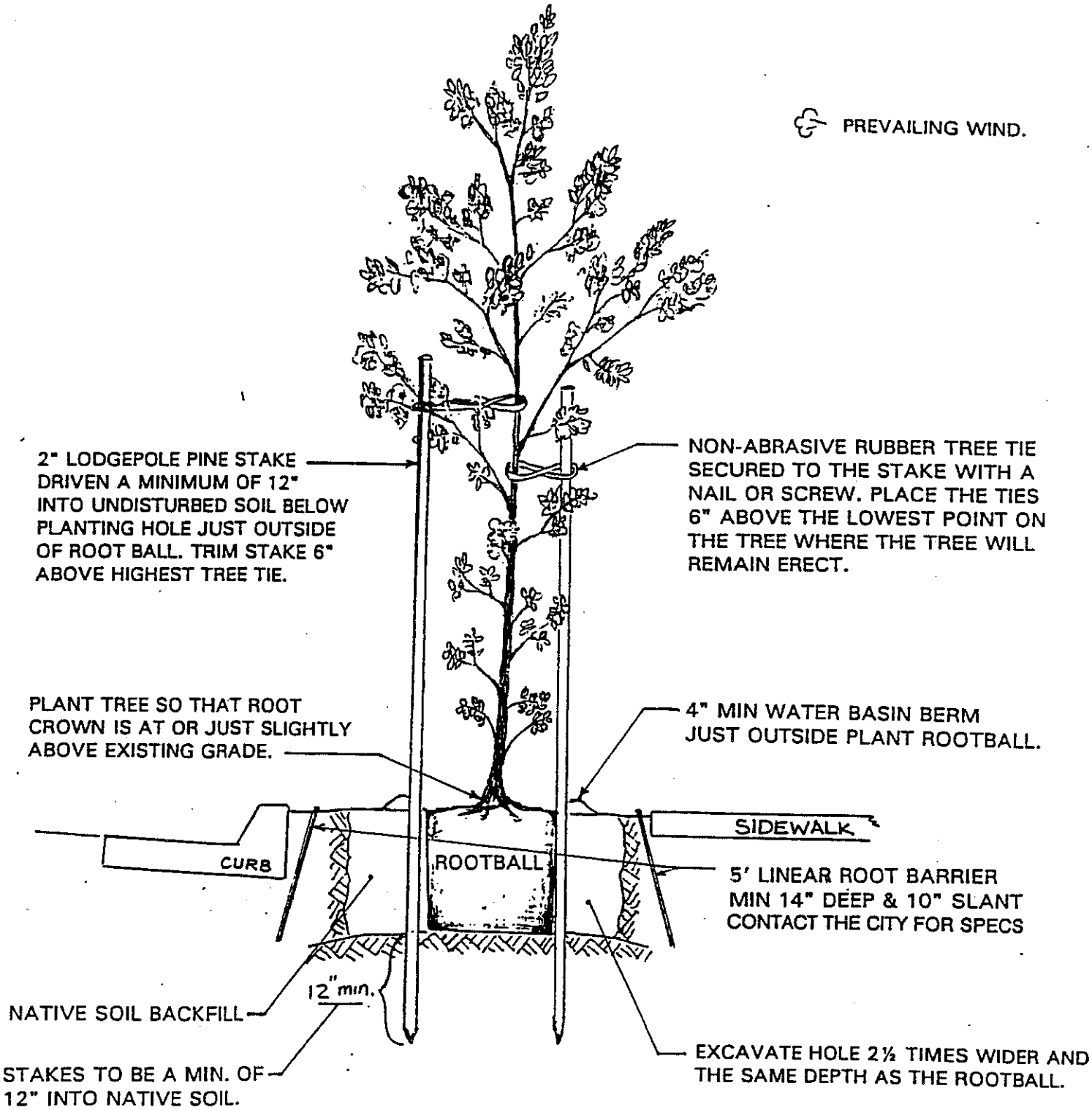

CITY OF SANTA ROSA		
TREE PLANTING IN PLANTER STRIP		
SCALE: NONE	DATE	
DWN ATS CHK OJC	APPROVED	FILE NO. D.S.-2575

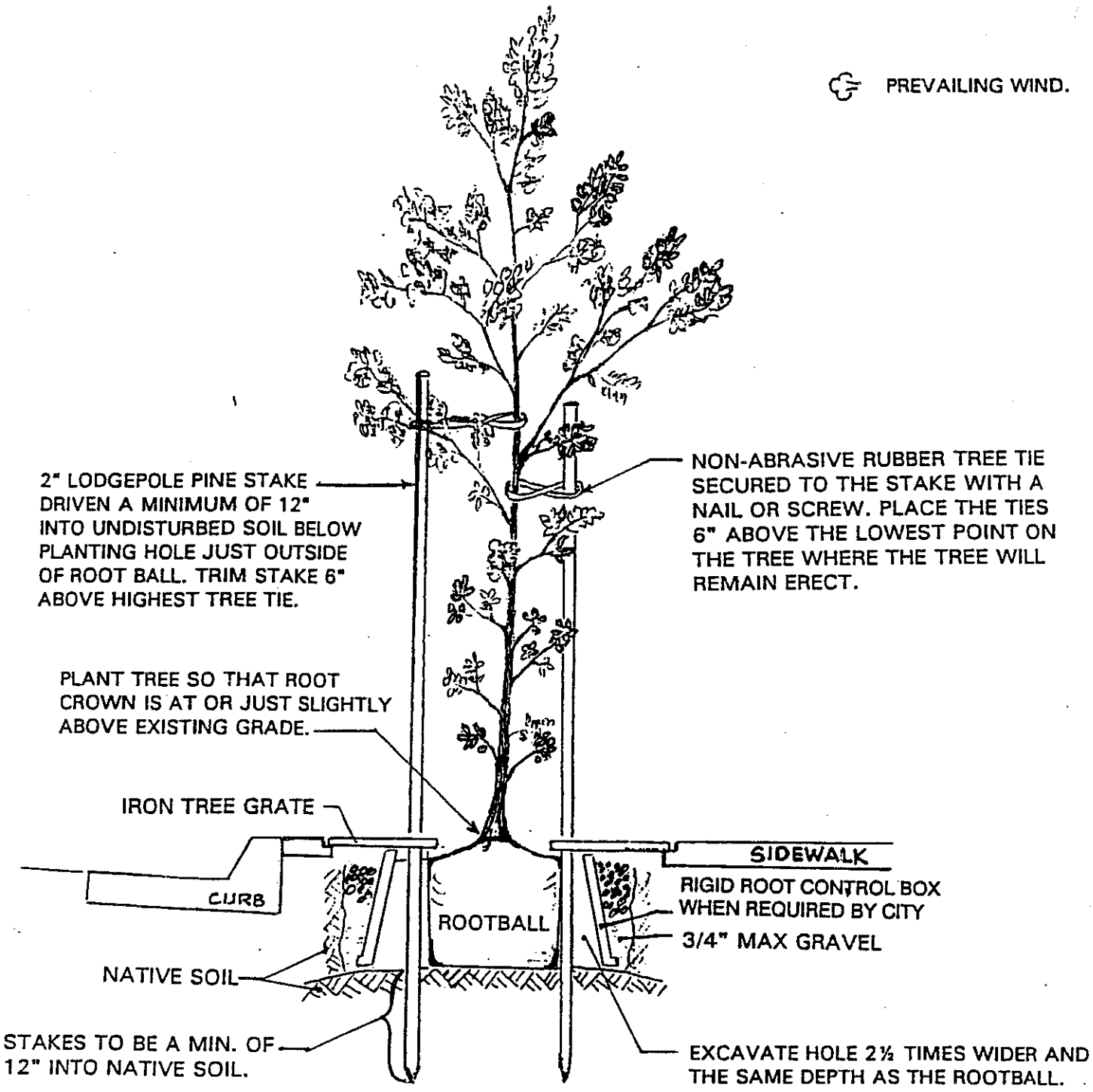

CITY OF SANTA ROSA

TREE PLANTING IN TREE WELL

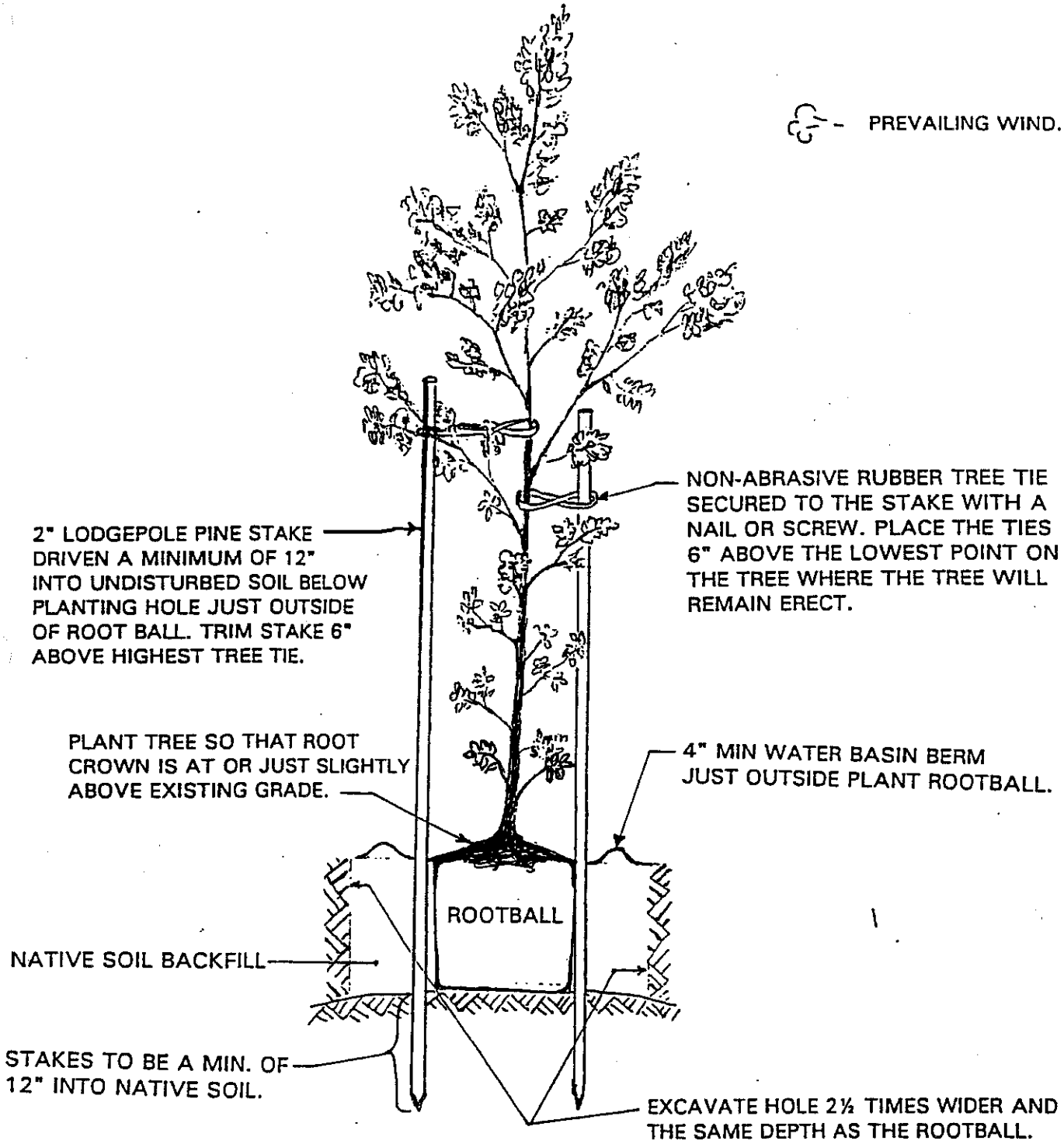

CITY OF SANTA ROSA

TREE PLANTING
IN BACK-ON PLANTER

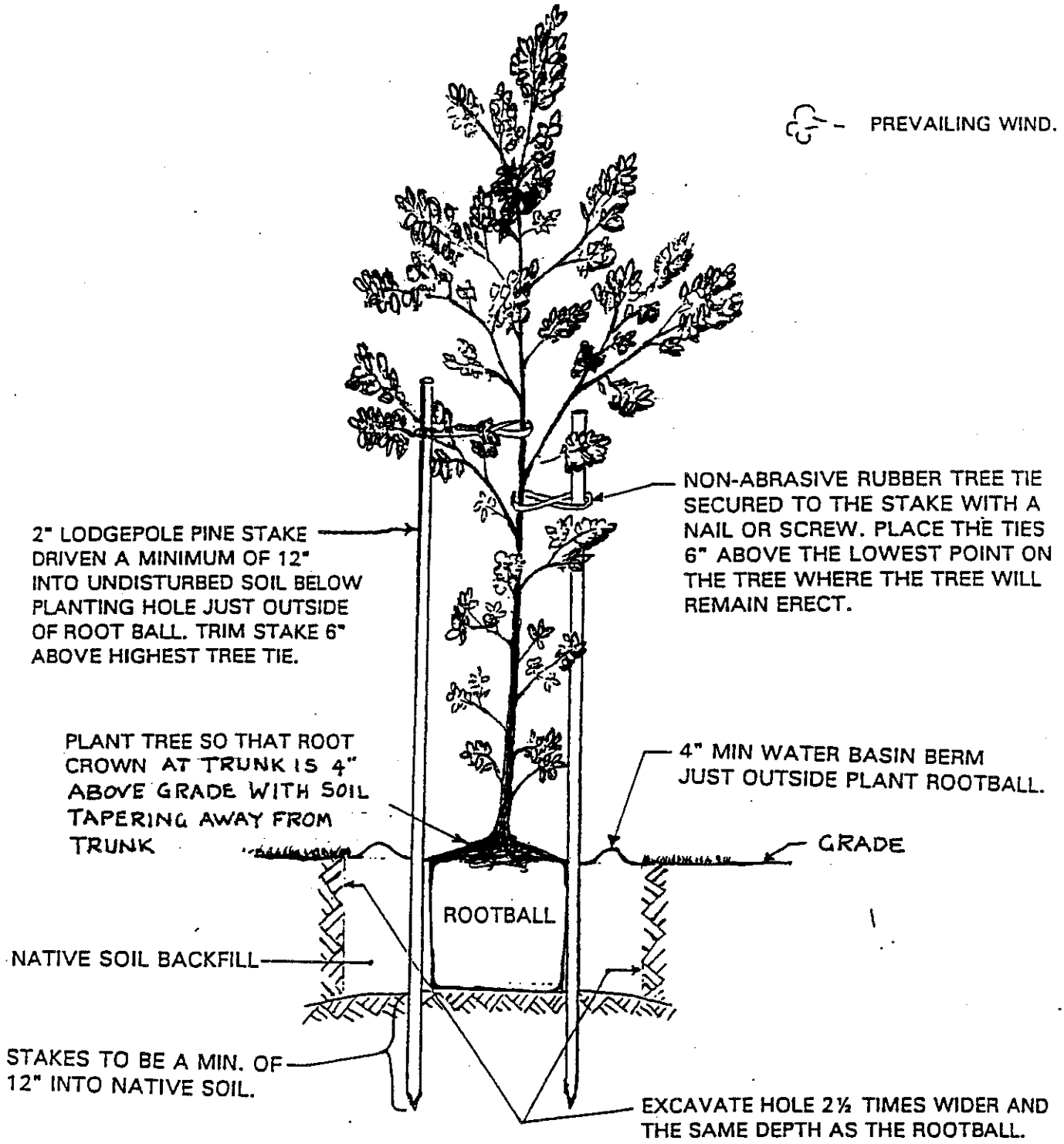

CITY OF SANTA ROSA

TREE PLANTING IN TURFGRASS

RESOLUTION NO. 22772

A RESOLUTION OF THE COUNCIL OF THE CITY OF SANTA ROSA ADOPTING: A STREET TREE AND URBAN FORESTRY STATEMENT, STREET TREE LIST 1996, MAJOR STREET TREE PLAN PROGRAM, AND STANDARDS AND SPECIFICATIONS FOR PLANTING PARKWAY TREES

WHEREAS, the City of Santa Rosa is a nationally recognized Tree City and places a great deal of value on healthy trees lining City streets; and

WHEREAS, these street trees must be carefully selected, placed and maintained to preserve the urban beauty, environment and scale, while protecting sidewalks, overhead wires and traffic view lines; and

WHEREAS, a group of knowledgeable staff, citizens and professionals have worked hard to develop a street tree planting program which will place the right tree in the right place.

NOW, THEREFORE, BE IT RESOLVED that the Council approves and adopts the Street Tree and Urban Forestry Statement, Street Tree List 1996, Major Street Tree Program, and Standards and Specifications for Planting Parkway Trees, copies of which are attached to and made a part of this resolution.

BE IT FURTHER RESOLVED that the Statement, List, Program, and Standards attached hereto shall become effective and operative on the day following the adoption of this resolution and the same shall supersede previously approved and/or adopted statements, lists, programs and standards relating to street trees and covering the same subject matter.

IN COUNCIL DULY PASSED this 16th day of July, 1996.

AYES: (5) Mayor Wright; Councilmembers Berto, Condron, Pedgrift, Wiggins
NOES: (0)
ABSENT: (0)
ABSTAIN: (0)

APPROVED: _____
Mayor

ATTEST: _____
Assistant City Clerk

APPROVED AS TO FORM

_____
City Attorney

6.96/treestd.4

STREET TREE AND URBAN FOREST STRATEGIES

- The City's Street Tree Master Plan will implement street tree goals of the General Plan and will be consistent with other street tree related policies of the Subdivision Design Guide and the Design Review Manual.

- The Street Tree Master Plan will include tree selection and planting criteria which will focus on important arterial streets and scenic roads. Establishing a theme tree on arterial streets is a primary goal. Street tree selections and planting requirements for collector and local streets will utilize the largest growing tree species appropriate for their specific locations. All Tree selections will give consideration to planting large growing, low maintenance, long lived trees.

- The primary goal for arterial streets is to achieve streetscape continuity by maintaining a single tree specie to set the theme. Where continuation of the same specie is not feasible due to constraining conditions, such as overhead utilities or small planting spaces, new street tree plantings will maintain continuity of form, scale and texture with the predominant tree of the street.

- On collector and local streets where street tree planting conditions may be heavily constrained by overhead or underground utilities, small planting spaces or other physical constraints, greater flexibility in tree selections will be used. Tree selections will be based upon ability to grown in confined spaces, utilizing the largest growing species appropriate for the location. Selections will also be compatible with the prevailing character of the streetscape. Normally three tree species will be identified as options for planting along residential areas.

- Flexibility in the use of City construction standards may be considered in exceptional circumstances to maintain continuity in street tree planting.

- Tree selection for behind sidewalk areas in new development with "back-on" conditions will be made to be consistent with, reinforce and strengthen the arterial streetscape theme while also serving to screen noise walls.

- On scenic roads, street tree selections will use native species suitable to site (e.g. valley oaks, live oaks, madrone, etc.) To visually reinforce the scenic corridor.

- A downtown tree replacement program should be developed consistent with the goals of the Core Area Plan and the policies of the Design Review Guidelines in the replacement of diseased trees. The tree selection process should maintain the concept of the Downtown Plan which used street trees to delineate the downtown district.

- On streets where parkways do not exist or are practically too limited in size, opportunities

will be sought to encourage planting of significant growing trees on private property to reinforce the streetscape. Recreation and Parks will work with such groups as ReLeaf to explore thee opportunities on such streets as College - 101 to 4th Street and 4th Street east to Farmers Lane.

- The City's Tree Master Plan will be reviewed and updated every three to five years to reflect new arboricultural data and changing strategies.

- Opportunities will be sought on public properties, and private property owners will be urged to plant native oaks (i.e. Quercus lobata, Quercus kelloggii, Quercus agrifolia) where space and cultural conditions permit. New trees need to be planted to replace the aging giants which are so characteristic of and spectacular to the Santa Rosa area.

- The City will explore alternate means of providing sidewalks and sidewalk replacements in order to encourage the preservation of existing valuable trees.

- To promote the largest feasible tree lining public streets the City will recommit to requiring 8' parkways on arterial streets, 6' parkways on collector streets, 5' parkways on minor streets and tree planting cutouts in small lot subdivisions.

3.96/WM2/LR/TREES/STRATEGI

Street Trees (Back-On Guide - Sidewalk to Subdivision Fence)

(0) Denotes tree can be planted under overhead utilities

Street	Cross Streets	Predominate Existing Species	Future Replacement Trees	Major	Accents	Background
		Parkway				
Aston Theme: Pistache/Platanus	Total Length	Platanus	<3'Acer davidii (0) 3-5'Pistache(O) 8'+ Platanus	Platanus	Malus	Cedrus deodora
Bellevue Avenue (future arterial 4 lanes) Theme: Aesculus	Total Length	Quercus Aesculus Platanus	Aesculus (O)	Quercus lobata Pyrus 'Aristocrat'	Prunus	Libocedrus decurrens
Bennett Valley Road Class: Scenic Road	Farmers to Yulupa			Native Oak Quercus lobata	Cercis occidentalis	Sequoia sp.
Bennett Valley Road Theme: Zelkova Prunus	Santa Rosa Avenue to Farmers	Miscellaneous or none	<3' Cornus(0) 3-6' Prunus 'Thundercloud' (O) 6'+ Zelkova	Native Oak Quercus lobata	Cercis occidentalis	Librocedrus decurrens Quercus (Native)
Bethards Theme: Pistache	Bennett Valley to Summerfield	Pistache Morus Lagerstroemia	2 -4 'Acer 'campestre' (O) 4'+ Pistache (O)	Pistache	Malus	
Brookwood Theme: Pistache/Zelkova	College to Sonoma	Pistache (Median) Liriodendron (Backon)	4-5'Pistache(0) median 5-6' Zelkova behind sidewalk	Quercus rubra	Pistache	Liquidambar NOTE: This is all a "behind the sidewalk situation"
Brush Creek Theme: Oaks Class: Scenic Road	Sonoma Hwy. to Montecito	Quercus	Quercus lobata Quercus agrifolia	Native Oak	Cercis occidentalis	Native Oak
Burbank	Total Length	Few	Pistache(0)	Platanus	Cercis occidentalis	Sequoia sp.
Calistoga Class: Urban Theme: Koelreuteria/quercus suber	Total Length	Magnolia, Liriodendron Liquidambar, Prunus, Pistache, Eucalyptus	4'+Koelreuteria (0) 8'+ Quercus suber	Quercus kelloggii	Cercis occidentalis	Calocedrus

Street Trees (Back-On Guide - Sidewalk to Subdivision Fence)

Street	Cross Streets	Predominate Existing Species	Future Replacement Trees	Major	Accents	Background
		Parkway				
Cleveland Avenue Theme: Pyrus/Robinia	Russell to Hopper	Platanus	<4'Lager-stroemia(0) 4'+ Pyrus Varieties 6'+ Robinia	None Projected		
Coffey Lane Theme: Pyrus/Gingko	Hopper & San Miguel to Piner Road	Platanus	4'+ Pyrus (0) Hi-lines 6'+"Gingko 'Fairmount'	Quercus suber	Pyrus'Capitol'	Calocedrus decurrens
East College Theme: Lagerstroemia/Fraxinus	101 to 4th	Ligustrum Lagerstroemia	Lagerstroemia, Fraxinus behind sidewalk and where space is available	None Projected		
West College Theme: Koelreuteria/Fraxinus	Fulton to Cleveland	Platanus Robinia Gleditsia	2-4' Tristania laurina, 'elegans' (O) 4'+ Koelreuteria(0) 5'+Fraxinus ' Morraine'	Platanus Fraxinus 'Morraine'	Lagerstroemia Magnolia	Pinus roxburghii
Corporate Center Parkway Theme: Platanus		Platanus Pyrus	Platanus 'Bloodgood'	Pyrus	Malus	Quercus lobata
North Dutton Theme: Pyrus/Tristania laurina	Sebastopol to Guerneville	Platanus Pyrus Liquidambar	2-3'Tristania laurina, 'Elegans' (0) 4'+ Pyrus 'Chanticleer' 12'+Liquidambar	Liquidambar	Malus	Sequoia sempervirens
Dutton(Southern segment) Theme: Pyrus/Celtis	Sebastopol South	Platanus Pyrus Liquidambar	2-3' Tristania (0) 4'+ Pyrus 8'+ Fraxinus 'Pennsylvania'	Liquidambar	Malus	Sequoia sempervirens

Street Trees (Back-On Guide - Sidewalk to Subdivision Fence)

Street	Cross Streets	Predominate Existing Species	Future Replacement Trees	Major	Accents	Background
		Parkway				
South Dutton(west of Dutton to be renamed) Theme: Zelkova	Sebastopol South	None	6'+ Zelkova	None Projected		
Farmers Lane Theme: Pyrus	Bennett Valley to 4th St.	Magnolia Liquidambar Eucalyptus Robinia Pyrus	2-4' Acer campestre (O) 4'+ Pyrus Varieties	None Projected		
Farmer's Lane Future Extension Class:(Keep natural)Scenic Road Theme: Natives	future extension to Santa Rosa Avenue	None		Quercus lobata Pseudotsuga menziesii Q. Agrifolia Cedrus Native bunch grass	Use natives Cercis	Quercus Agrifolia Quercus Lobata Cedrus Pseudotsuga menziesii
4th Street Theme: Acer/ Pistache Oaks east of Farmers Note: Cal Trans approval will be necessary	E Street to Farmers Lane	Photinia Gleditsia Pyrus	3'+ Acer buergeranum Plant Pistache behind sidwalk as space is available	None Projected		
	Farmers Lane East to City Limits	No Parkway	No Parkway	Native Oaks	Cercis occidentalis	Native Oaks
Fresno (future collector) Theme: Quercus/Koelreuteria		Miscellaneous	4'+Koelreuteria(O) 6'+ Quercus suber	Quercus agrifolia	Cercis occidentalis	Libocedrus decurrens
Fulton Road Theme: Pyrus & Platanus Class: Scenic/Urban	Hwy. 12 to Piner Road	Platanus & Pyrus	<4' Acer buergeranum (O) 4-6' Pyrus (Hi-wires)(O) 6'+Platanus, Acer *	Plataunus & Quercus kelloggii	Pyrus 'Red Spire' Cercis occidentalis	Quercus lobata

Street Trees (Back-On Guide - Sidewalk to Subdivision Fence)

Street	Cross Streets	Predominate Existing Species	Future Replacement Trees	Major	Accents	Background
		Parkway				
Guerneville Road Theme: Acer/Quercus rubra	101 to Fulton	Liquidambar, Magnolia, Celtis, Ulnus Platanus	3-4' Acer buergeranum (O) 4-6' Acer 'October Glory' (O) (Hi-wires) 6'+ Quercus rubra	Magnolia/ Platanus	Crataegus	Quercus lobata, kelloggii, agrifolia
*Requires unique planting strategies to plant in areas under 8'						
Hearn Avenue Theme: Lagerstroemia, Celtis, Fraxinus	Total length	Miscellaneous	2 + Lagerstroemia 'Cherokee' (0) 4'+ or behind sidewalks, Celtis occidentalis, Fraxinus, 'Moraine'	Quercus agrifolia	Cercis occidentalis	Libocedrus decurrens
Hoen Theme: Koelreuteria/ Zelkova	Cypress Way to Summerfield Rd.	Koelreuteria Gleditsia	<4' Lagerstroemia (O) >4' + Koelreuteria (O) >5' Zelkova	Liquidambar Koelreuteria	Lagerstroemia Pyrus	Cedrus deodora
Hopper Avenue Theme: Magnolia/Celtis	Cleveland Avenue to Coffey Lane	Platanus Liquidambars Magnolia	4' Lagerstroemia(O) 4'+ Magnolia 'St. Mary's'(0) 5-8' Celtis 8'+ Magnolia grandiflora	Magnolia grandiflora	Pyrus	Sequoia
Juniper Avenue (future collector) Theme: Aesculus		small oaks	4'+ Aesculus Carnea (O)	Quercus agrifolia	Cercis occidentalis	Libocedrus decurrens
Kawana Springs Theme: Quercus/Acer		None	<4' Acer compestre (O) 4-6' Acer rubra 6'+ Quercus rubra	Liquidambar	Cercis occidentalis	Quercus (native)
Ludwig Avenue Theme: Aesculus/Acer		Quercus Pinus Juglans	4'+ Aesculus(O)	Quercus (natives)	Pyrus	Cedrus deodora

Street Trees (Back-On Guide - Sidewalk to Subdivision Fence)

Street	Cross Streets	Predominate Existing Species	Future Replacement Trees	Major	Accents	Background
		Parkway				
Marlow Road Theme: Pistache/ Cercis	College to Piner	Platanus Pistache Cercis etc.	<4' Cercis (0) 4'+ Pistache(0) 8'+ Acer platanoides	Calocedrus decurrens Platanus	Cercis Pistache	Calocedrus decurrens
Mendocino Theme: Pistache Gingko as accent tree behind sidewalk or where space available	College to Redwood Highway	Pistache	<4' Acer campestre (O) >4' Pistache(O) 6'+ Gingko or Gingko behind sidewalk	Gingko Native Oaks	Prunus 'Akebono'	Sequoia
Middle Rincon Theme: Acer	Hwy. 12 to Montecito	Robinia Acer	3-4' Acer buergeranum (0) 4'+ Acer rubrum	None Projected		
Mission Theme: Lagerstroemia, Celtis	Sonoma Hwy. to Montecito	Liriodendron Logerstroemia, Gleditsia	<4'Lagerstroemia 4'+ Sapium sebiferum (O)	Fraxinus' Morraine'	Cornus	Quercus lobata
Montecito Theme: Cercis,Celtis Zelkova	Brush Creek to Calistoga	Gledetsia Eucalyptus Pistacia	3-4' Cercis occidentalis(O) >4' Celtis australis >5' Zelkova	Platanus	Cercis occidentalis	Liquidambar Libocedrus decurrens
Montgomery Theme: Prunus Cornus	Brookwood to Mission	Gleditsia Prunus Ligustrum	2-3' Cornus (O) 3'+ Prunus (O)	None Projected		
Montgomery Class: Scenic	Mission to Los Alamos	natives	natives	Quercus (natives)	Cercis	Sequoia, Pseudotsuga, Cedrus
Moorland Avenue (future collector) Theme: Robinia		Betula, Eucalyptus, Acacias, Pinus, Quercus	Robinia decaisneana	Magnolia	Cornus	Sequoia
Northpoint Parkway Theme: Platanus		Platanus	Platanus* 'Bloodgood'	Pyrus	Malus	Sequoia sempervirens

MAJOR STREET TREE PROGRAM

Street Trees (Back-On Guide - Sidewalk to Subdivision Fence)

Street	Cross Streets	Predominate Existing Species	Future Replacement Trees	Major	Accents	Background
		Parkway				
North Street/Franklin Theme: Zelkova, Aesculus carnea	College to Franklin	Liriodendrun Platanus	2-4' Cornus(O) 4-5'Aesculus(O) 5'+Zelkova 8'+ Platanus	Aesculus Gingko	Cercis occidentalis	Liquidambar Cedrus deodora
Pacific/Bryden Theme: Fraxinus/Prunus	Mendocino to 4th	Lagerstroemia Platanus	2-3" Lagerstroemia (O) 3-5' Prunus (O) 5'+ Fraxinus 'Moraine'	None Projected		
*Requires special planting strategies to plant in areas under 8'						
Petaluma Hill Theme: Quercus , Cercis		Miscellaneous	3'+ Cercis occodentalis (O) 6'+ Quercus rubra	Liquidambar	Cercis occidentalis	Quercus natives
Piner Road Theme: Pyrus/Gingko	Cleveland to Fulton	Platanus	4-6' Pyrus' Redspire' (O) Hi-wires 6'+ Gingko 'Fairmont'	Gingko	Pyrus	Sequoia
Range Avenue Theme: Laurus Pistache, Robinia	Guerneville to Bicentenial	Eucalyptus, Platanus Pistache	3-4' Laurus 'Saratoga' (0) 4'+ Pistacia(O) 6'+ Robinia	Platanus	Prunus 'Akebono'	Sequoia
Santa Rosa Avenue Theme: Pistacia w/Gingko in background and where space is available	Downtown to Hearn	Robinia, Prunus Celtis Pistacia		Gingko	Pistacia	Cedrus deodara
	South of Hearn	Platanus	4'+ Pistacia (0) 6'+ Gingko 8'+ Platanus			
Sebastopol Road Theme: Platanus/Acer	Wright Rd. to Olive	Platanus	4-6' Acer (O) Hi-lines 'October Glory' 6-8'+ Platanus *'Bloodgood'	Platanus	Pyrus Prunus Thundercloud	Sequoia
Sonoma Avenue Theme: Pistache	E to Summerfield	Magnolia Gleditsia Liquidambar	2-3' Tristania laurina (0) 4'+ Pistache (0)	None Projected		

Street Trees (Back-On Guide - Sidewalk to Subdivision Fence)

Street	Cross Streets	Predominate Existing Species	Future Replacement Trees	Major	Accents	Background
		Parkway				
W. Steele/Lewis Theme: Pistache	101/ to Franklin	Pistache Eucalyptus	2-3' Acer (O) 4'+ Pistache (O) (Existing Planting)	None Projected		
Stony Point Road Theme: Pistache	W. College to Hwy 12	Pistache Platanus Liquidamabar Betula	3-4' Laurus (0) 'Saratoga' 4'+ Pistache (0) 8'+ Fraxinus 'Morraine'	Fraxinus 'Morraine'	Crataegus/Malus	Libocedrus decurrens
*Requires unique planting strategies to plant in areas under 8'						
Stony Point Road Theme: Acer rubrum 'Red Sunset'	Hwy 12 to Bellevue	Platanus	4' + Acer (0) 'Red Sunset'	Acer 'Red Sunset'	Lagerstroemia 'Pecos'	Librocedrus decurrens
Summerfield Theme: Acer/Quercus	Entire	Eucalyptus Platanus Liquidambar Liriodendron Rhus.	<3' Acer 'Davidii' (0) 3-6' Acer 'Scanlon' 6'+ Quercus rubra	Liquidambar Quercus lobata	Cercis occidentalis	Quercus lobata Liquidambar Libocedrus decurrens
West Third Theme: Pyrus/Pistache	Fulton to Wilson	Pyrus Pistache	<4' Acer buergeranum 4' Pyrus (0) or Pistache (0)	Native Oaks	Cercis occidentalis	Sequoia Sempervirens
S. Wright Road Theme: Aesculus	Ludwig to Sebastopol	Quercus	4'+ Aesculus carnea 6'+ Quercus suber	Quercus lobata	Crataegus	Cedrus deodora
Yolanda Theme: Fraxinus		None	8'+ Fraxinus	Liquidambar	Prunus 'Akebono'	Quercus lobata
Yulupa Theme: Acer	Montgomery to Bennett Valley	Liquidambar Platanus	<4' Acer campestre (O) 4'+ Acer rubrum 8'+ Acer platanoides	Pistacia	Prunus 'Akebano'	Libocedrus decurrens

(O)Denotes overhead

STREET . LIST 1996

MAJOR STREETS LIST (STANDARD #230A)

(Minor and collector list may also be used depending upon situation with guideline of using largest tree feasible for space available)

STREET TREE LIST	TREE CHARACTERISTICS				PLANTING APPLICATION								COMMENT
Genus Species 'Variety' Common Name	Minimum Planter Size	Evergreen or Deciduous	Height & Spread at Maturity	Growth Rate	Tree Well	Planter Strip	Blvd	Natural Area	Rocky Hillside	Confined Space	Median or Back-On	OVERHEAD	
ACER platanoides Norway Maple	8'	DEC	50h 50w	M		X	X						
ACER rubrum Larger Varieties	4	DEC	40h 20w	M-F	X	X							
CELTIS australis European Hackberry	5	DEC	50h 45W	M		X							Resists oak root fungus
FRAXINUS americana and Varieties White Ash	6'	DEC	80h 40w	F		X	X						
FRAXINUS holotricha 'Moraine'	5'		40h 35w	F		X							Needs frequent pruning as young trees
FRAXINUS pennsylvanica Green Ash	8'	DEC	40h 30w	M		X							
GINGKO biloba 'Fairmount' 'Autumn Gold'	6' 8'	DEC	60h 35w	S		X	X				X		Male Tree Only
MAGNOLIA grandiflora 'var.' 'Samuel Sommer' 'Russet'	8'	EVER	30-60h 20-40w	S		X	X				X		Small Varieties Only
PISTACIA chinensis Chinese Pistache	4	DEC	30h 25w	S-M	X	X						X	
QUERCUS coccinia Scarlet Oak	6'	DEC	70h 40w	S-M		X	X	X	X		X		Holds dead leaves until new leaves sprout
QUERCUS rubra Red Oak	6'	DEC	80h 40w	M			X	X	X		X		May hold dead leaves until new leaves sprout
QUERCUS suber Cork Oak	6'	EVER	50h 40w	S-M		X	X	X			X		
QUERCUS virginiana Southern Live Oak	8'	EVER	60h 60w	S		X	X						
ROBINIA pseudoacacia 'Idahoensis'	6'	DEC	60h 35w	M-F		X	X				X		Brittle Wood
ZELKOVA serrata	6'	DEC	60h 60w	M		X							

**Cultivars of similar size and shape may be substituted with City approval

STREET TREE LIST 1996
COLLECTOR STREETS LIST (STANDARD #230B)
(minor tree list may also be used depending upon the situation, with the guideline of using largest tree feasible for space available)

STREET TREE LIST	TREE CHARACTERISTICS				PLANTING APPLICATION								COMMENTS
Genus Species "Variety" Common Name	Minimum Planter Size	Evergreen or Deciduous	Height & Spread at Maturity	Growth Rate	Tree Well	Planter Strip	Blvd.	Natural Area	Rocky Hillside	Confined Space	Median or Backon	Overhead	
ACER rubrum 'Autumn Flame'	6	DEC	50h 30w	M		X							
ACER pseudoplatanus Sycamore maple	5	DEC	40h 35w	M		X							
ACER rubrum Medium Varieties	4	DEC	40h 20w	M-F	X	X							
CELTIS australis European Hackberry	4	DEC	45h 30w	M	X	X							
CELTIS occidentalis Common Hackberry	5	DEC	50h 45w	M		X							Resists oak root fungus
FRAXINUS holotricha 'Moraine' FRAXINUS ornus 'Flowering Ash'	5	DEC	40h 30w	F		X							
GINGKO biloba 'Fairmount'	6	DEC	40h 20w	S		X							
PISTACIA chinensis Chinese Pistache	4	DEC	30h 25w	S-M	X	X						X	
QUERCUS phellos Willow Oak	5	DEC	50h 40w	M		X							
QUERCUS rober 'Fastigiata' Upright English Oak	6	DEC	40h 20w	S-M	X	X	X	X					
ROBINIA ambigua 'Idahoensis' 'Decaisneana'	6	DEC	60h 35w	M-F		X	X				X		Brittle Wood
SAPIUM sebiferum Chinese Tallow Tree	4	DEC	35h 30w	M		X						X	
ZELKOVA serrata	5	DEC	60h 60w	M		X							

**Cultivars of similar size and shape may be substituted with City approval

STREET TREE LIST 1996

MINOR STREETS LIST (STANDARD #230C)

STREET TREE LIST	TREE CHARACTERISTICS				PLANTING APPLICATION								COMMENTS
Genus Species "Variety" Common Name	Minimum Planter Size	Evergreen or Deciduous	Height & Spread at Maturity	Growth Rate	Tree Well	Planter Strip	Blvd	Natural Area	Rocky Hillside	Confined Space	Median or Back-On	Overhead	
ACER buergeranum Trident maple	3	DEC	25h 20w	M	X	X						X	
ACER campestre Hedge maple	3	DEC	30h 25W	M	X	X				X		X	Reserved for narrow or overhead situations
ACER palmatum Japanese maple	3	DEC	30h 20w	S	X	X						X	Standard Only
ACER rubrum smaller "Varieties"	4	DEC	45h 15w	M-F	X	X							Narrow
ACER tataricum Chinese maple	3	DEC	25h 25w	M	X	X						X	
AESCULUS carnea Red Horse Chestnut	4	DEC	40h 20w	M		X					X	X	
CARPINUS betulus "Fastigiata" Pyramidal European Hornbeam	3	DEC	40h 15w	S	X	X				X			Special Circum-stances
CELTIS australis European Hackberry	4	DEC	45h 30w	M	X	X							
CELTIS occidentalis Common Hackberry	5	DEC	50h 45w	M		X							Resists oak root fungus
CERCIS canadensis Eastern Redbud	3	DEC	35h 25w	M	X	X						X	

STREET TREE LIST	TREE CHARACTERISTICS				PLANTING APPLICATION								COMMENTS
Genus Species "Variety" Common Name	Minimum Planter Size	Evergreen or Deciduous	Height & Spread at Maturity	Growth Rate	Tree Well	Planter Strip	Blvd	Natural Area	Rocky Hillside	Confined Space	Median or Back-On	Overhead	
KOELREUTERIA paniculata or bipinnata Goldenrain Tree Chinese Flame Tree	4	DEC	30h 30w	S-M	X	X						X	
LAURUS 'Saratoga' Hybrid Laurel	3	EVER	35h 25w	S	X	X						X	
MAGNOLIA 'St. Mary'	4	EVER	20h 20w	S	X	X						X	
PISTACIA chinensis Chinese Pistache	4	DEC	40h 25w	S-M		X						X	
PRUNUS cerasifera 'varieties' Purple leaf plum	3	DEC	35h 20w	M		X						X	Varieties 'Thunder-cloud' 'Krauter Vesuvius'
PYRUS calleryana 'varieties' Flowering Pear 'Autumn Blaze'	4	DEC	25h 25w	M	X	X				X		X High only 33'+	Untopped only Fireblight resistant varieties
SAPIUM sebiferum Chinese tallow tree	4	DEC	35h 30w	M	X	X				X		X	

**Cultivars of similar size and shape may be substituted with City approval

6/95/wm/trees/minor

STREET TREE LIST 1996
PRE-EXISTING NARROW PARKWAYS. TREE OPTIONS

STREET TREE LIST	TREE CHARACTERISTICS				PLANTING APPLICATION							COMMENT	
Genus Species 'Variety' Common Name	Minimum Planter Size	Evergreen or Deciduous	Height & Spread at Maturity	Growth Rate	Tree Well	Planter Strip	Blvd	Natural Area	Rocky Hillside	Confined Space	Median or Back-On	OVERHEAD PG & E wire situation	
ACER ginnala Amur maple	2'	DEC	25h 20w	M	X	X						X	Reserved for narrow parkways Availability may be an issue
ACER davidii David's Maple	2'	DEC	25h 20w	M	X	X						X	Narrowed parkways only Availability may be an issue
CORNUS kousa Dogwood	2'	DEC	30h 20w	M	X	X				X		X	Reserved for narrow parkway
LAGERSTROEMIA indica 'varieties' (mildew resistant varieties)	2'	DEC	25h 20w	M	X	X				X		X	Sometimes needs special staking. Reserved for narrow parkways
PHOTINIA fraseri	2'	EVER	20h 15w	M	X	X						X	Std - Narrow parkways only
PITTOSPORUM eugeniodes	2'	EVER	25h 20w	M	X	X				X		X	Narrow parkways only
TRISTANIA laurina or TRISTANIA 'Elegant'	2'	EVER	25h 20w	S	X	X				X		X	Narrow parkways only

**Cultivars of similar size and shape may be substituted with City approval

STREET TREE LIST 1996
LARGE/SPECIAL USE TREES (SEE SPECIFIC USES)

STREET TREE LIST	TREE CHARACTERISTICS				PLANTING APPLICATION								COMMENT
Genus Species 'Variety' Common Name	Minimum Planter Size	Evergreen or Deciduous	Height & Spread at Maturity	Growth Rate	Tree Well	Planter Strip	Blvd	Natural Area	Rocky Hillside	Confined Space	Median or Back-On	Overhead	
CALOCEDRUS decurrens Incense Cedar	10'	EVER	90h 30w	S				X			X		
CEDRUS deodara Deodar Cedar	10'	EVER	80+h 40w	F			X				X		
CINNAMOMUM camphora Camphor Tree	12'	EVER	70h 60w	M-F			X						
CRATAEGUS Varieties Hawthorne	5'	DEC	25h 20w	M							X	X	Historical neighbor-hoods
LIQUIDAMBAR styraciflua Sweetgum (See comments)	12'	DEC	60h 30W	F			X				X		Varieties 'Burgundy' 'Festival' 'Palo Alto'
PINUS canariensis Canary Island Pine	10'	EVER	70h 25w	M			X	X	X		X		
PINUS eldarica Afghan pine		EVER	30-80h 30w	F									
PINUS roxburghii Chir Pine		EVER	60h 40w	F									
PLATANUS aceriflolia London Plane for varieties see comments	8 -10'	DEC	80h 45w	M		X							To be used as a replacement for continuity in areas where it exists with 6 or 8' Pkwys 'Bloodgood' "Yarwood'
QUERCUS agrifolia Live Oak	12'	EVER	70h 70w	S			X	X					
QUERCUS lobata Valley Oak	12'	DEC	80h 80w	S-M				X	X				
SEQUOIA sempervirens 'var' Coast Redwood (See comments)	12'	EVER	90h 45w	F			X	X			X		Use New Smaller Varieties 'Soquel, "Aptos, etc.

**Cultivars of similar size and shape may be substituted with City approval

6/96/wm/trees/special

CITY OF
SANTA ROSA

PUBLIC WORKS DEPARTMENT
69 Stony Circle
Santa Rosa, CA 95401
707-543-3800
Fax: 707-543-3801

May 4, 2005

TO: ALL PLAN HOLDERS

NEW CITY DESIGN STANDARDS

On April 26, 2005, the City Council adopted new Storm Drain design and construction standards and revised the existing standards for Decorative Street Light – Standard 615 D and Standard Trench Detail – Standard 215. Enclosed are copies of these standards.

Please insert the new Storm Drain Standards into your copy of the City Design and Construction Standards and update Standards 615D and 215.

Edwin E. Baker

EDWIN E. BAKER
Deputy Director of Public Works – Engineering